2SD2131

HIGH POWER SWITCHING APPLICATIONS

HAMMER DRIVE, PULSE MOTOR DRIVE APPLICATIONS

- High DC Current Gain
  : $h_{FE}=2000$ (Min.) ($V_{CE}=3V$, $I_C=3A$)
- Low Saturation Voltage
  : $V_{CE\,(sat)}=1.5V$ (Max.) ($I_C=3A$)
- Zener Diode Included Between Collector and Base.
- Unclamped Inductive Load Energy : E=150mJ (Min.)

Unit in mm

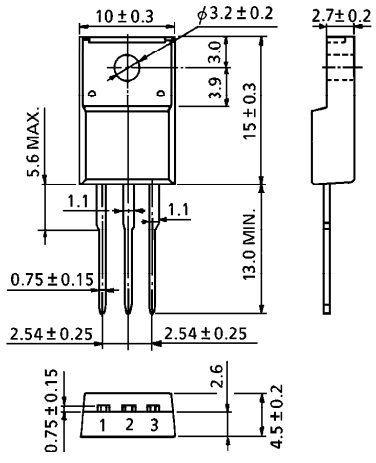

1. BASE
2. COLLECTOR
3. EMITTER

JEDEC	—
EIAJ	SC-67
TOSHIBA	2-10R1A

Weight : 1.7g (Typ.)

MAXIMUM RATINGS (Ta = 25°C)

CHARACTERISTIC		SYMBOL	RATING	UNIT
Collector-Base Voltage		V_{CBO}	60±10	V
Collector-Emitter Voltage		V_{CEO}	60±10	V
Emitter-Base Voltage		V_{EBO}	7	V
Collector Current	DC	I_C	5	A
	Pulse	I_{CP}	8	
Base Current		I_B	0.5	A
Collector Power Dissipation	Ta=25°C	P_C	2.0	W
	Tc=25°C		30	
Junction Temperature		T_j	150	°C
Storage Temperature Range		T_{stg}	−55~150	°C

EQUIVALENT CIRCUIT

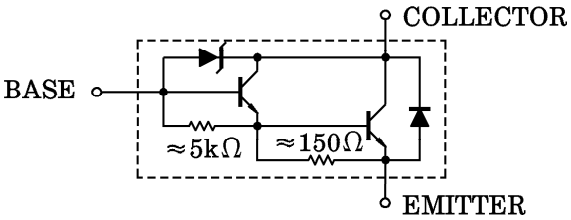

ELECTRICAL CHARACTERISTICS (Ta = 25°C)

CHARACTERISTIC		SYMBOL	TEST CONDITION	MIN.	TYP.	MAX.	UNIT
Collector Cut-off Current		I_{CBO}	$V_{CB}=45V$, $I_E=0$	—	—	10	μA
Collector Cut-off Current		I_{CEO}	$V_{CE}=45V$, $I_B=0$	—	—	10	μA
Emitter Cut-off Current		I_{EBO}	$V_{EB}=6V$, $I_C=0$	—	—	2.5	mA
Collector-Base Breakdown Voltage		$V_{(BR)CBO}$	$I_C=1mA$, $I_E=0$	50	60	70	V
Collector-Emitter Breakdown Voltage		$V_{(BR)CEO}$	$I_C=10mA$, $I_B=0$	50	60	70	V
DC Current Gain		$h_{FE(1)}$	$V_{CE}=3V$, $I_C=3A$	2000	—	15000	
		$h_{FE(2)}$	$V_{CE}=3V$, $I_C=5A$	1000	—	—	
Collector-Emitter Saturation Voltage		$V_{CE(sat)(1)}$	$I_C=3A$, $I_B=6mA$	—	1.1	1.5	V
		$V_{CE(sat)(2)}$	$I_C=5A$, $I_B=20mA$	—	1.3	2.5	
Base-Emitter Saturation Voltage		$V_{BE(sat)}$	$I_C=3A$, $I_B=6mA$	—	1.7	2.5	V
Unclamped Inductive Load Energy		$E_{S/B}$	(Note 1)	150	—	—	mJ
Switching Time	Turn-on Time	t_{on}	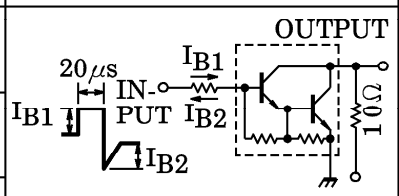 $I_{B1}=-I_{B2}=6mA$, DUTY CYCLE≦1% $V_{CC}=30V$	—	1.0	—	μs
	Storage Time	t_{stg}		—	4.0	—	
	Fall Time	t_f		—	2.5	—	

(Note 1) Measurement circuit of unclamped inductive load energy.

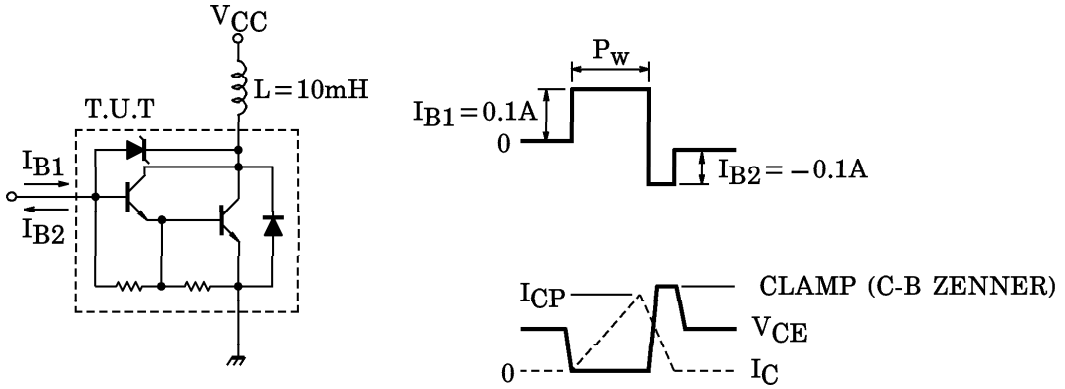

(Note 2) ① Pulse width adjusted for desired I_{CP} ($I_{CP}=5.47A$ MIN.)
② $E=1/2\ L\ I_{CP}^2$

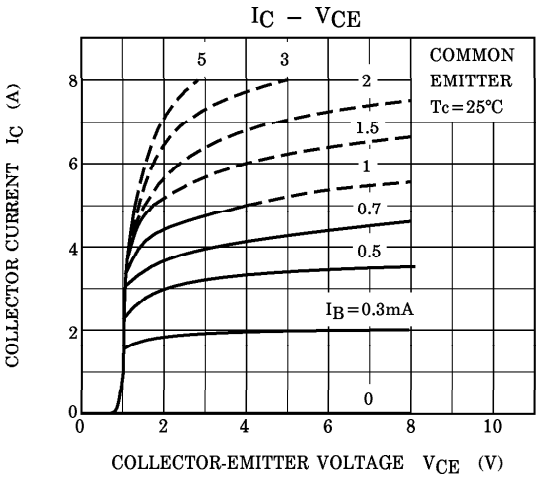
IC – VCE
COMMON
EMITTER
Tc=25°C
5
3
2
1.5
1
0.7
0.5
IB=0.3mA
0
COLLECTOR CURRENT IC (A)
COLLECTOR-EMITTER VOLTAGE VCE (V)

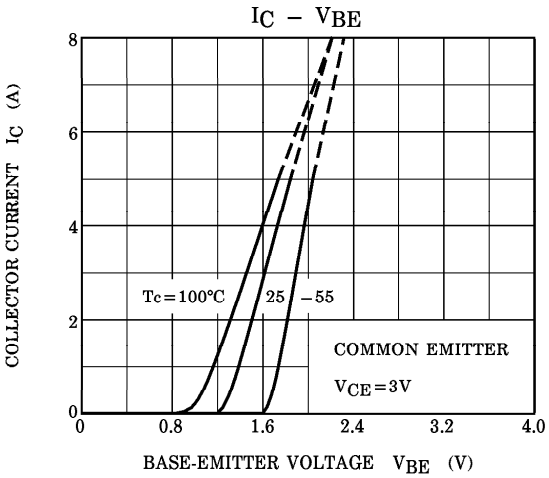
IC – VBE
Tc=100°C
25
–55
COMMON EMITTER
VCE=3V
COLLECTOR CURRENT IC (A)
BASE-EMITTER VOLTAGE VBE (V)

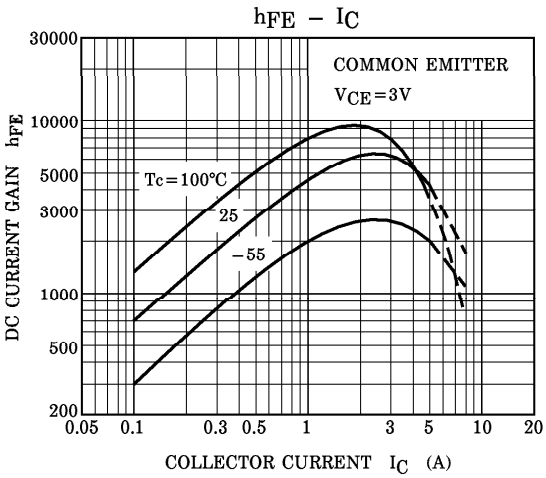
hFE – IC
COMMON EMITTER
VCE=3V
Tc=100°C
25
–55
DC CURRENT GAIN hFE
COLLECTOR CURRENT IC (A)

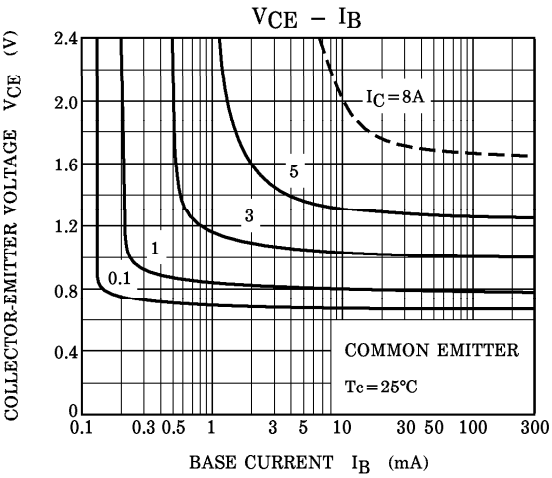
VCE – IB
IC=8A
5
3
1
0.1
COMMON EMITTER
Tc=25°C
COLLECTOR-EMITTER VOLTAGE VCE (V)
BASE CURRENT IB (mA)

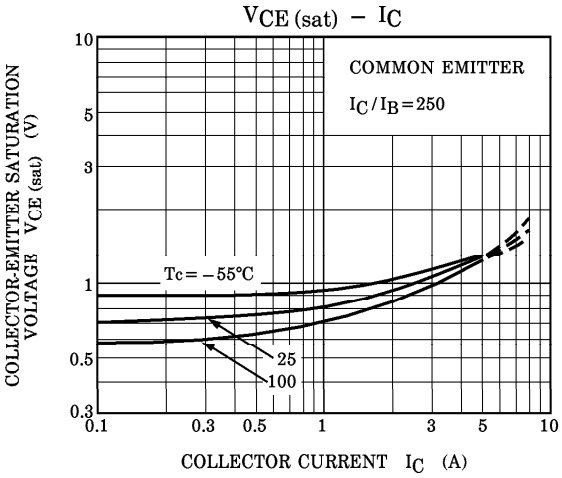
VCE (sat) – IC
COMMON EMITTER
IC/IB=250
Tc=–55°C
25
100
COLLECTOR-EMITTER SATURATION VOLTAGE VCE (sat) (V)
COLLECTOR CURRENT IC (A)

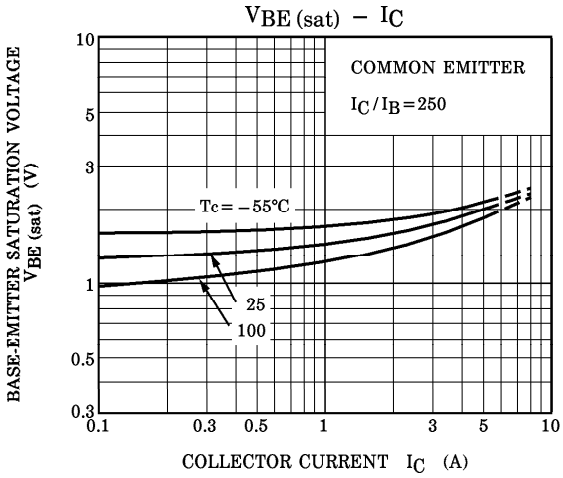
VBE (sat) – IC
COMMON EMITTER
IC/IB=250
Tc=–55°C
25
100
BASE-EMITTER SATURATION VOLTAGE VBE (sat) (V)
COLLECTOR CURRENT IC (A)