VNB35NV04-E, VNP35NV04-E, VNV35NV04-E

OMNIFET II: fully autoprotected Power MOSFET

Datasheet - production data

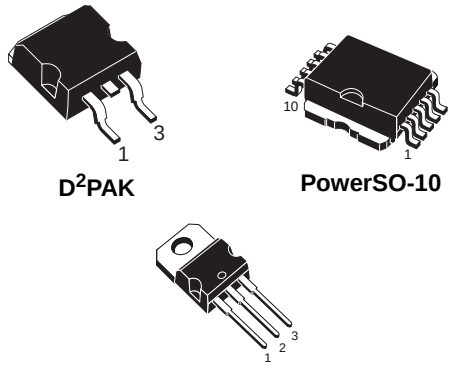

Features

Type	$R_{DS(on)}$	I_{lim}	V_{clamp}
VNB35NV04-E VNP35NV04-E VNV35NV04-E	10 mΩ(1)	30 A	40 V

1. For PowerSO-10 only

- Linear current limitation
- Thermal shutdown
- Short circuit protection
- Integrated clamp
- Low current drawn from input pin
- Diagnostic feedback through input pin
- ESD protection
- Direct access to the gate of the Power MOSFET (analog driving)
- Compatible with standard Power MOSFET

Description

The VNB35NV04-E, VNP35NV04-E and VNV35NV04-E are monolithic devices designed in STMicroelectronics® VIPower® M0-3 Technology, intended for replacement of standard Power MOSFETs from DC up to 25 kHz applications.

Built-in thermal shutdown, linear current limitation and overvoltage clamp protect the chip in harsh environments. Fault feedback can be detected by monitoring the voltage at the input pin.

Table 1. Device summary

Package	Order codes	
	Tube	Tape and reel
D2PAK	VNB35NV04-E	VNB35NV04TR-E
TO-220	VNP35NV04-E	—
PowerSO-10	VNV35NV04-E	VNV35NV04TR-E

2 Electrical specification

Figure 3. Current and voltage conventions

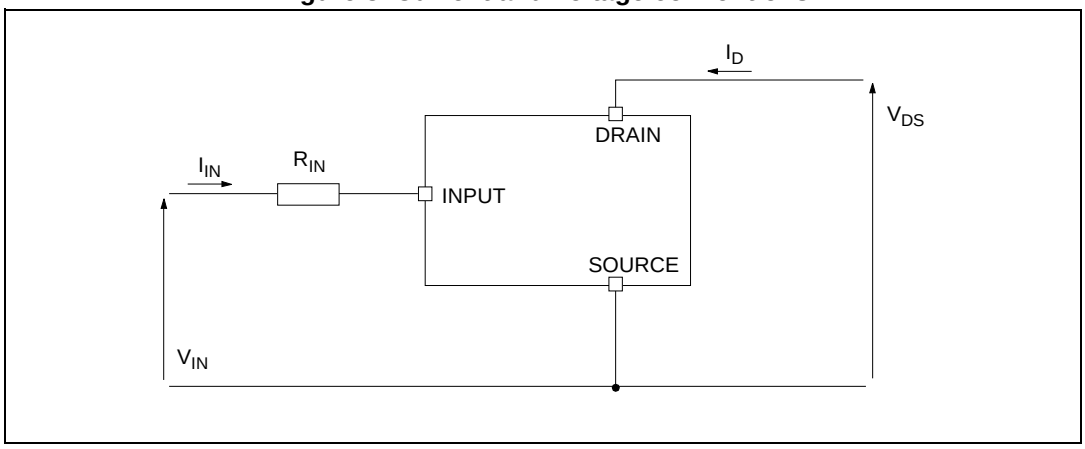

2.1 Absolute maximum ratings

Stressing the device above the rating listed in may cause permanent damage to the device. These are stress ratings only and operation of the device at these or any other conditions above those indicated in the operating sections of this specification is not implied. Exposure to the conditions in table below for extended periods may affect device reliability

Table 2. Absolute maximum ratings

Symbol	Parameter	Value			Unit
		PowerSO-10	D^2PAK	TO-220	
V_{DS}	Drain-source voltage (V_{IN} = 0 V)	Internally clamped			V
V_{IN}	Input voltage	Internally clamped			V
I_{IN}	Input current	+/-20			mA
$R_{IN\ MIN}$	Minimum input series impedance	4.7			Ω
I_D	Drain current	Internally limited			A
I_R	Reverse DC output current	-30			A
V_{ESD1}	Electrostatic discharge (R = 1.5 KΩ, C = 100 pF)	4000			V
V_{ESD2}	Electrostatic discharge on output pin only (R = 330 Ω, C = 150 pF)	16500			V
P_{tot}	Total dissipation at T_c = 25°C	125	125	125	W
T_j	Operating junction temperature	Internally limited			°C
T_c	Case operating temperature	Internally limited			°C
T_{stg}	Storage temperature	-55 to 150			°C

2.2 Thermal data

Table 3. Thermal data

Symbol	Parameter	Value			Unit
		PowerSO-10	D^2PAK	TO-220	
$R_{thj-case}$	Thermal resistance junction-case (max)	1	1	1	°C/W
$R_{thj-amb}$	Thermal resistance junction-ambient (max)	50(1)	50(1)	50	°C/W

1. When mounted on a standard single-sided FR4 board with 50mm^2 of Cu (at least 35 mm thick) connected to all DRAIN pins.

2.3 Electrical characteristics

-40°C < T_j < 150°C, unless otherwise specified.

Table 4. Off

Symbol	Parameter	Test conditions	Min	Typ	Max	Unit
V_{CLAMP}	Drain-source clamp voltage	V_{IN} = 0 V; I_D = 15 A	40	45	55	V
V_{CLTH}	Drain-source clamp threshold voltage	V_{IN} = 0 V; I_D = 2 mA	36			V
V_{INTH}	Input threshold voltage	V_{DS} = V_{IN}; I_D = 1 mA	0.5		2.5	V
I_{ISS}	Supply current from input pin	V_{DS} = 0 V; V_{IN} = 5 V		100	150	µA
V_{INCL}	Input-source clamp voltage	I_{IN} = 1 mA	6	6.8	8	V
		I_{IN} = -1 mA	-1.0		-0.3	V
I_{DSS}	Zero input voltage drain current (V_{IN} = 0 V)	V_{DS} = 13 V; V_{IN} = 0 V; T_j = 25 °C			30	µA
		V_{DS} = 25 V; V_{IN} = 0 V			75	µA

Table 5. On

Symbol	Parameter	Test conditions	Max		Unit
			PowerSO-10	D^2PAK TO-220	
$R_{DS(on)}$	Static drain-source on resistance	V_{IN} = 5 V; I_D = 15 A; T_j = 25 °C	10	13	mΩ
		V_{IN} = 5 V; I_D = 15 A; T_j = 150 °C	20	24	mΩ

T_j = 25°C, unless otherwise specified.

Table 6. Dynamic

Symbol	Parameter	Test conditions	Min	Typ	Max	Unit
g_{fs}(1)	Forward transconductance	V_{DD} = 13 V; I_D = 15 A	—	35	—	S
C_{OSS}	Output capacitance	V_{DS} = 13 V; f = 1 MHz; V_{IN} = 0 V	—	1300	—	pF

1. Pulsed: Pulse duration = 300 ms, duty cycle 1.5%

Table 7. Switching

Symbol	Parameter	Test conditions	Min	Typ	Max	Unit
$t_{d(on)}$	Turn-on delay time	V_{DD} = 15 V; I_D = 15 A; V_{gen} = 5 V; R_{gen} = $R_{IN\ MIN}$ = 4.7 Ω (see)	—	150	500	ns
t_r	Rise time		—	840	2500	ns
$t_{d(off)}$	Turn-off delay time		—	980	3000	ns
t_f	Fall time		—	600	1500	ns
$t_{d(on)}$	Turn-on delay time	V_{DD} = 15 V; I_D = 15 A; V_{gen} = 5 V; R_{gen} = 2.2 KΩ (see)	—	4	12	µs
t_r	Rise time		—	27	100	µs
$t_{d(off)}$	Turn-off delay time		—	34	120	µs
t_f	Fall time		—	31	110	µs
$(di/dt)_{on}$	Turn-on current slope	V_{DD} = 15 V; I_D = 15 A;V_{gen} = 5 V; R_{gen} = $R_{IN\ MIN}$ = 4.7 Ω	—	18		A/µs
Q_i	Total input charge	V_{DD} = 12 V; I_D = 15 A; V_{IN} = 5 V; I_{gen} = 2.13 mA (see	—	118		nC

Table 8. Source drain diode

Symbol	Parameter	Test Conditions	Min	Typ	Max	Unit
V_{SD}(1)	Forward on voltage	I_{SD} = 15 A; V_{IN} = 0 V	—	0.8	—	V
t_{rr}	Reverse recovery time	I_{SD} = 15 A; dI/dt = 100 A/µs; V_{DD} = 30 V; L = 200 µH (see)	—	400	—	ns
Q_{rr}	Reverse recovery charge		—	1.4	—	µC
I_{RRM}	Reverse recovery current		—	7	—	A

1. Pulsed: Pulse duration = 300 ms, duty cycle 1.5%

Table 9. Protections (-40°C < T_j < 150°C, unless otherwise specified)

Symbol	Parameter	Test Conditions	Min	Typ	Max	Unit
I_{lim}	Drain current limit	V_{IN} = 6 V; V_{DS} = 13 V	30	45	60	A
t_{dlim}	Step response current limit	V_{IN} = 6 V; V_{DS} = 13 V		50		µs

Table 9. Protections (-40°C < T_j < 150°C, unless otherwise specified) (continued)

Symbol	Parameter	Test Conditions	Min	Typ	Max	Unit
T_{jsh}	Overtemperature shutdown		150	175	200	°C
T_{jrs}	Overtemperature reset		135			°C
I_{gf}	Fault Sink Current	V_{IN} = 5 V; V_{DS} = 13 V; T_j = T_{jsh}	10	15	20	mA
E_{as}	Single pulse avalanche energy	Starting T_j = 25°C; V_{DD} = 24 V; V_{IN} = 5 V; R_{gen} = $R_{IN\ MIN}$ = 4.7 Ω; L = 24 mH (see	1.7			J