VNB14NV04, VND14NV04
VND14NV04-1, VNS14NV04

"OMNIFET II"
fully autoprotected Power MOSFET

Features

TYPE	$R_{DS(on)}$	I_{lim}	V_{clamp}
VNB14NV04 VND14NV04 VND14NV04-1 VNS14NV04	35 mΩ	12 A	40 V

- Linear current limitation
- Thermal shutdown
- Short circuit protection
- Integrated clamp
- Low current drawn from input pin
- Diagnostic feedback through input pin
- ESD protection
- Direct access to the gate of the Power MOSFET (analog driving)
- Compatible with standard Power MOSFET

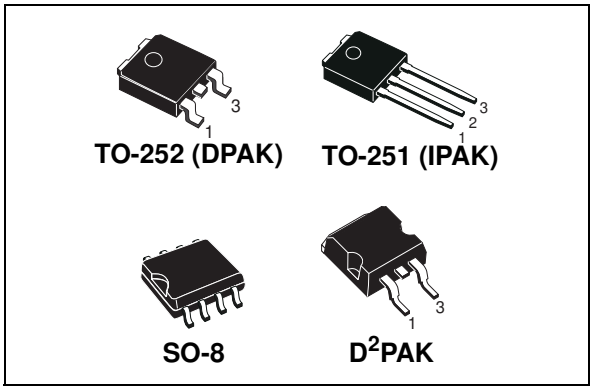

Description

The VNB14NV04, VND14NV04, VND14NV04-1 and VNS14NV04 are monolithic devices made using STMicroelectronics VIPower™ M0 technology, intended for replacement of standard power MOSFETS in DC to 50 KHz applications. Built-in thermal shutdown, linear current limitation and overvoltage clamp protect the chip in harsh environments.

Fault feedback can be detected by monitoring the voltage at the input pin.

Table 1. Device summary

Package	Tube	Tube (lead free)	Tape and reel	Tape and reel (lead free)
D^2PAK	VNB14NV04	VNB14NV04-E	VNB14NV0413TR	VNB14NV04TR-E
TO-252 (DPAK)	VND14NV04	VND14NV04-E	VND14NV0413TR	VND14NV04TR-E
TO-251 (IPAK)	VND14NV04-1	VND14NV04-1-E	-	-
SO-8	VNS14NV04	-	-	-

2 Electrical specification

Figure 2. Current and voltage conventions

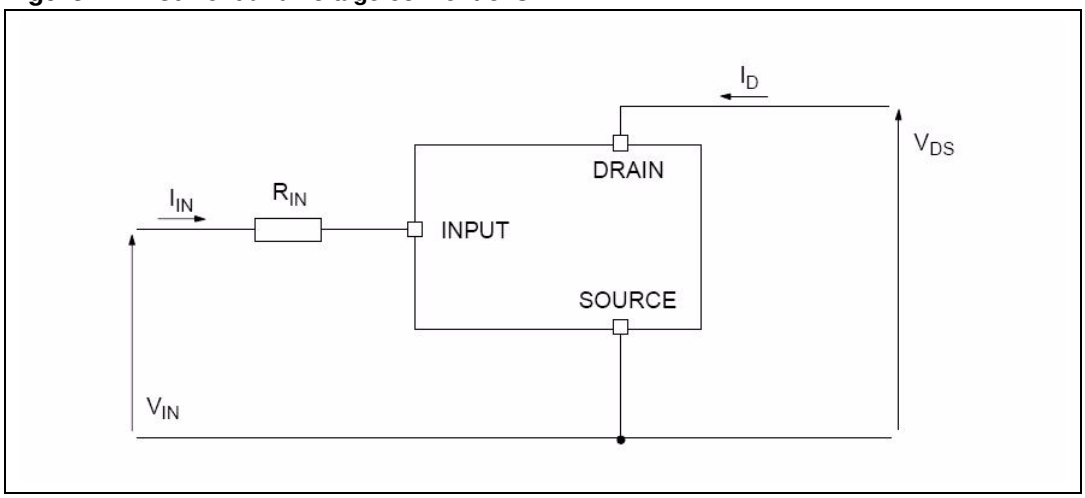

2.1 Absolute maximum rating

Table 2. Absolute maximum rating

Symbol	Parameter	Value				Unit
		SO-8	DPAK	IPAK	D^2PAK	
V_{DS}	Drain-source voltage (V_{IN}=0 V)	Internally clamped				V
V_{IN}	Input voltage	Internally clamped				V
I_{IN}	Input current	+/-20				mA
$R_{IN\ MIN}$	Minimum input series impedance	10				Ω
I_D	Drain current	Internally limited				A
I_R	Reverse DC output current	-15				A
V_{ESD1}	Electrostatic discharge (R=1.5 KΩ, C=100 pF)	4000				V
V_{ESD2}	Electrostatic discharge on output pin only (R=330 Ω, C=150 pF)	16500				V
P_{tot}	Total dissipation at T_c=25 °C	4.6	74	74	74	W
E_{MAX}	Maximum switching energy (L=0.4 mH; R_L=0 Ω; V_{bat}=13.5 V; T_{jstart}=150 °C; I_L=18 A)		93		93	mJ
T_j	Operating junction temperature	Internally limited				°C
T_c	Case operating temperature	Internally limited				°C
T_{stg}	Storage temperature	-55 to 150				°C

2.2 Thermal data

Table 3. Thermal data

Symbol	Parameter	Value				Unit
		SO-8	DPAK	IPAK	D^2PAK	
$R_{thj-case}$	Thermal resistance junction-case max		1.7	1.7	1.7	°C/W
$R_{thj-lead}$	Thermal resistance junction-lead max	27				°C/W
$R_{thj-amb}$	Thermal resistance junction-ambient max	90(1)	65(1)	102	52(1)	°C/W

1. When mounted on a standard single-sided FR4 board with 0.5 cm^2 of Cu (at least 35 µm thick) connected to all DRAIN pins. Horizontal mounting and no artificial air flow.

2.3 Electrical characteristics

-40 < Tj < 150 °C unless otherwise specified.

Table 4. Electrical characteristics

Symbol	Parameter	Test Conditions	Min	Typ	Max	Unit
Off						
V_{CLAMP}	Drain-source clamp voltage	V_{IN}=0 V; I_D=7 A	40	45	55	V
V_{CLTH}	Drain-source clamp threshold voltage	V_{IN}=0 V; I_D=2 mA	36			V
V_{INTH}	Input threshold voltage	V_{DS}=V_{IN}; I_D=1 mA	0.5		2.5	V
I_{ISS}	Supply current from input pin	V_{DS}=0 V; V_{IN}=5 V		100	150	µA
V_{INCL}	Input-source clamp voltage	I_{IN}=1 mA I_{IN}=-1 mA	6 -1.0	6.8	8 -0.3	V
I_{DSS}	Zero input voltage drain current (V_{IN}=0 V)	V_{DS}=13 V; V_{IN}=0 V; T_j=25 °C V_{DS}=25 V; V_{IN}=0 V			30 75	µA
On						
$R_{DS(on)}$	Static drain-source on resistance	V_{in} = 5 V I_D = 7 A T_j = 25 °C V_{in} = 5 V I_D = 7 A			35 70	mΩ
Dynamic (Tj=25°C, unless otherwise specified)						
g_{fs} (1)	Forward transconductance	V_{DD} = 13 V I_D = 7 A		18		S
C_{oss}	Output capacitance	V_{DS} = 13 V f = 1 MHz V_{IN} = 0 V		400		pF
Switching						
$t_{d(on)}$	Turn-on delay time	V_{DD} = 15 V I_D = 7 A V_{gen} = 5 V R_{gen} = $R_{IN\ MIN}$ =10 Ω		80	250	ns
t_r	Rise time			350	1000	ns
$t_{d(off)}$	Turn-off delay time			450	1350	ns
t_f	Fall time			150	500	ns

Table 4. Electrical characteristics (continued)

Symbol	Parameter	Test Conditions	Min	Typ	Max	Unit
$t_{d(on)}$	Turn-on delay time	V_{DD} = 15 V I_d = 7 A V_{gen} = 5 V R_{gen} = 2.2 KΩ		1.5	4.5	µs
t_r	Rise time			9.7	30.0	µs
$t_{d(off)}$	Turn-off delay time				25.0	µs
t_f	Fall time			10.2	30.0	µs
$(di/dt)_{on}$	Turn-on current slope	V_{DD} = 15 V I_D = 7 A V_{gen} = 5 V R_{gen} = $R_{IN\ MIN}$ =10 Ω		16		A/µs
Q_i	Total input charge	V_{DD} = 12 V I_D = 7 A V_{in} = 5 V; I_{gen} = 2.13 mA (see		36.8		nC
Source drain diode						
V_{SD}(1)	Forward on voltage	I_{SD} = 7 A V_{in} = 0 V		0.8		V
t_{rr}	Reverse recovery time	I_{SD} = 7 A; di/dt = 40 A/µs V_{DD} = 30 V L = 200 µH		300		ns
Q_{rr}	Reverse recovery charge			0.8		µC
I_{RRM}	Reverse recovery current			5		A
Protection						
I_{lim}	Drain current limit	V_{IN} = 5 V; V_{DS} = 13 V	12	18	24	A
t_{dlim}	Step response current limit	V_{IN} = 5 V; V_{DS} = 13 V		45		µs
T_{jsh}	Over temperature shutdown		150	175	200	°C
T_{jrs}	Over temperature reset		135			°C
I_{gf}	Fault sink current	V_{IN} = 5 V; V_{DS} = 13 V; T_j = T_{jsh}	10	15	20	mA
E_{as}	Single pulse avalanche energy	starting T_j = 25 °C; V_{DD} = 24 V V_{IN} = 5 V; R_{gen} = $R_{IN\ MIN}$ = 10 Ω; L = 24 mH (see	400			mJ

1. Pulsed: Pulse duration = 300 µs, duty cycle 1.5 %