TIP47G, TIP48G, TIP50G

High Voltage NPN Silicon Power Transistors

This series is designed for line operated audio output amplifier, SWITCHMODE™ power supply drivers and other switching applications.

Features

- 250 V to 400 V (Min) – $V_{CEO(sus)}$
- 1 A Rated Collector Current
- Popular TO–220 Plastic Package
- These Devices are Pb–Free and are RoHS Compliant*

1.0 AMPERE
POWER TRANSISTORS
NPN SILICON
250 – 300 – 400 VOLTS
40 WATTS

MAXIMUM RATINGS

Rating	Symbol	TIP47	TIP48	TIP50	Unit
Collector – Emitter Voltage	V_{CEO}	250	300	400	Vdc
Collector – Base Voltage	V_{CB}	350	400	500	Vdc
Emitter – Base Voltage	V_{EB}	5.0			Vdc
Collector Current – Continuous – Peak	I_C	1.0 2.0			Adc
Base Current	I_B	0.6			Adc
Total Power Dissipation @ T_C = 25°C Derate above 25°C	P_D	40 0.32			W W/°C
Total Power Dissipation @ T_C = 25°C Derate above 25°C	P_D	2.0 0.016			W W/°C
Unclamped Inducting Load Energy (See Figure 8)	E	20			mJ
Operating and Storage Junction Temperature Range	T_J, T_{stg}	–65 to +150			°C

THERMAL CHARACTERISTICS

Characteristic	Symbol	Max	Unit
Thermal Resistance, Junction–to–Case	$R_{\theta JC}$	3.125	°C/W
Thermal Resistance, Junction–to–Ambient	$R_{\theta JA}$	62.5	°C/W

Stresses exceeding Maximum Ratings may damage the device. Maximum Ratings are stress ratings only. Functional operation above the Recommended Operating Conditions is not implied. Extended exposure to stresses above the Recommended Operating Conditions may affect device reliability.

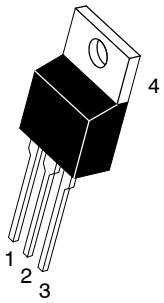

TO–220AB
CASE 221A
STYLE 1

MARKING DIAGRAM

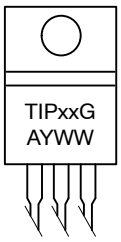

TIPxx	= Device Code
xx	= 47, 48, or 50
A	= Assembly Location
Y	= Year
WW	= Work Week
G	= Pb–Free Package

ORDERING INFORMATION

See detailed ordering and shipping information in the package dimensions section on page 2 of this data sheet.

ELECTRICAL CHARACTERISTICS (T_C = 25°C unless otherwise noted)

Characteristic		Symbol	Min	Max	Unit
OFF CHARACTERISTICS					
Collector−Emitter Sustaining Voltage (Note 1) (I_C = 30 mAdc, I_B = 0)	TIP47 TIP48 TIP50	$V_{CEO(sus)}$	250 300 400	– – –	Vdc
Collector Cutoff Current (V_{CE} = 150 Vdc, I_B = 0) (V_{CE} = 200 Vdc, I_B = 0) (V_{CE} = 300 Vdc, I_B = 0)	 TIP47 TIP48 TIP50	I_{CEO}	 – – –	 1.0 1.0 1.0	mAdc
Collector Cutoff Current (V_{CE} = 350 Vdc, V_{BE} = 0) (V_{CE} = 400 Vdc, V_{BE} = 0) (V_{CE} = 500 Vdc, V_{BE} = 0)	 TIP47 TIP48 TIP50	I_{CES}	 – – –	 1.0 1.0 1.0	mAdc
Emitter Cutoff Current (V_{BE} = 5.0 Vdc, I_C = 0)		I_{EBO}	–	1.0	mAdc
ON CHARACTERISTICS (Note 1)					
DC Current Gain (I_C = 0.3 Adc, V_{CE} = 10 Vdc) (I_C = 1.0 Adc, V_{CE} = 10 Vdc)		h_{FE}	 30 10	 150 –	–
Collector−Emitter Saturation Voltage (I_C = 1.0 Adc, I_B = 0.2 Adc)		$V_{CE(sat)}$	–	1.0	Vdc
Base−Emitter On Voltage (I_C = 1.0 Adc, V_{CE} = 10 Vdc)		$V_{BE(on)}$	–	1.5	Vdc
DYNAMIC CHARACTERISTICS					
Current−Gain − Bandwidth Product (I_C = 0.1 Adc, V_{CE} = 10 Vdc, f = 2.0 MHz)		f_T	10	–	MHz
Small−Signal Current Gain (I_C = 0.2 Adc, V_{CE} = 10 Vdc, f = 1.0 kHz)		h_{fe}	25	–	–

1. Pulse Test: Pulse width ≤ 300 μs, Duty Cycle ≤ 2.0%.

ORDERING INFORMATION

Device	Package	Shipping
TIP47	TO−220	50 Units / Rail
TIP47G	TO−220 (Pb−Free)	50 Units / Rail
TIP48	TO−220	50 Units / Rail
TIP48G	TO−220 (Pb−Free)	50 Units / Rail
TIP49	TO−220	50 Units / Rail
TIP49G	TO−220 (Pb−Free)	50 Units / Rail
TIP50	TO−220	50 Units / Rail
TIP50G	TO−220 (Pb−Free)	50 Units / Rail

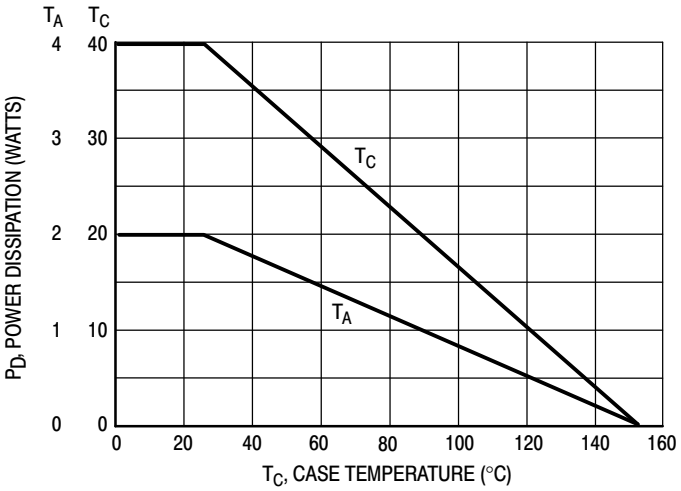

Figure 1. Power Derating

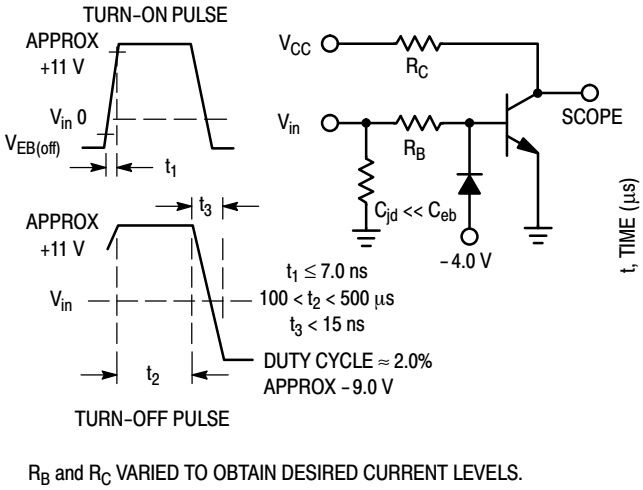

Figure 2. Switching Time Equivalent Circuit

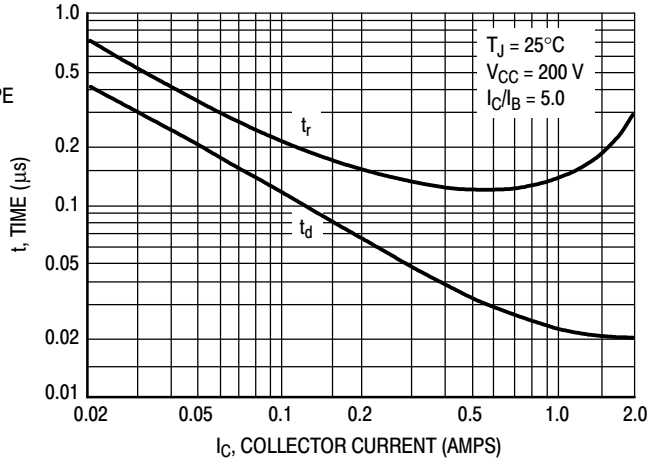

Figure 3. Turn−On Time

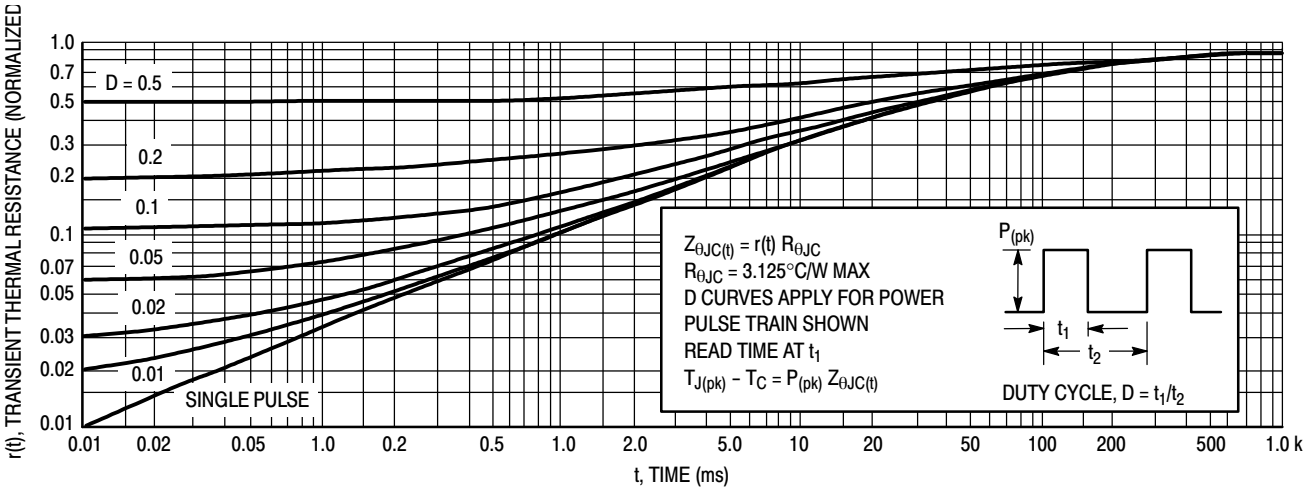

Figure 4. Thermal Response

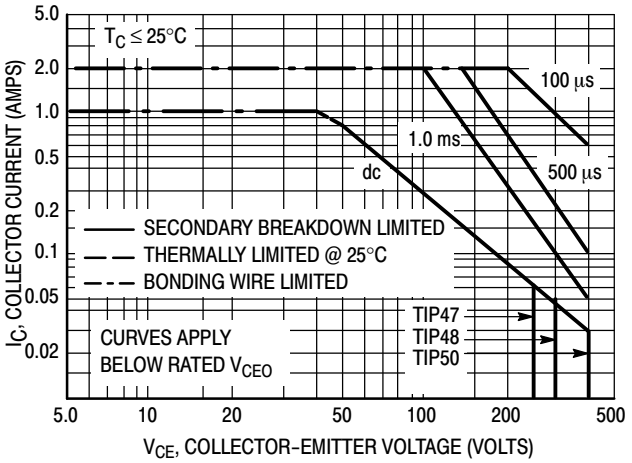

Figure 5. Active Region Safe Operating Area

There are two limitations on the power handling ability of a transistor: average junction temperature and second breakdown. Safe operating area curves indicate $I_C - V_{CE}$ limits of the transistor that must be observed for reliable operation, i.e., the transistor must not be subjected to greater dissipation than the curves indicate.

The data of Figure 5 is based on $T_{J(pk)} = 150°C$; T_C is variable depending on conditions. Second breakdown pulse limits are valid for duty cycles to 10% provided $T_{J(pk)} \leq 150°C$. $T_{J(pk)}$ may be calculated from the data in Figure 4. At high case temperatures, thermal limitations will reduce the power that can be handled to values less than the limitations imposed by second breakdown.

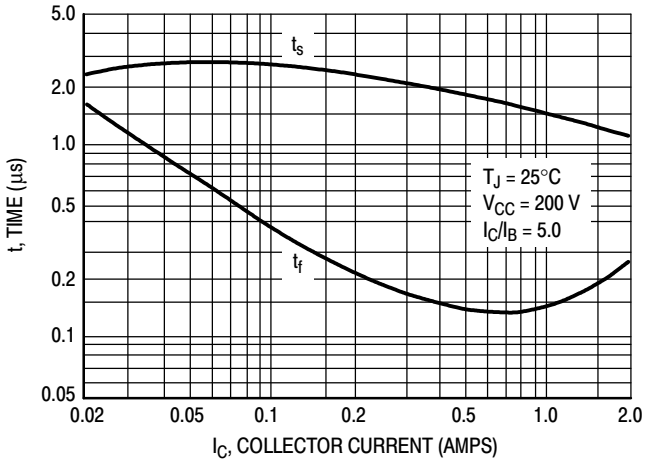

Figure 6. Turn−Off Time

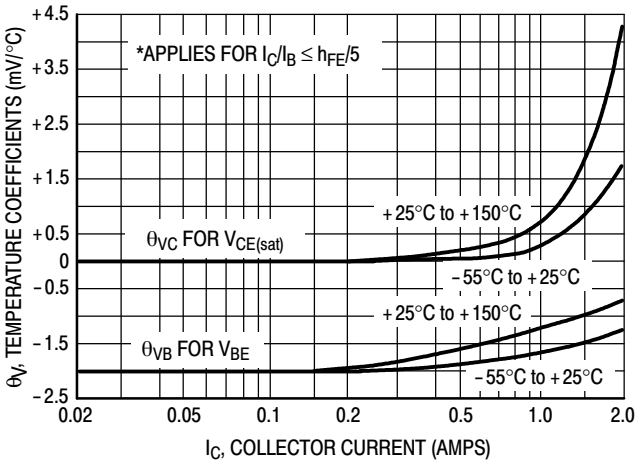

Figure 7. Temperature Coefficients

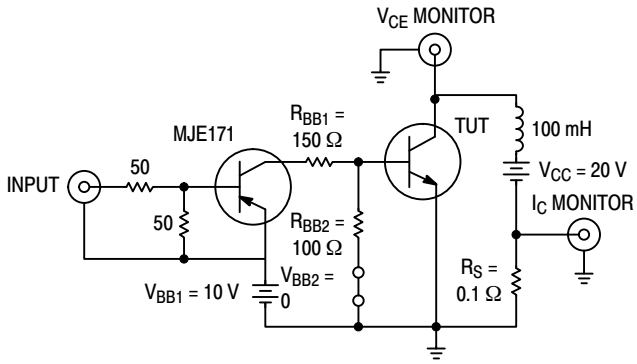

Note A: Input pulse width is increased until $I_{CM} = 0.63$ A.

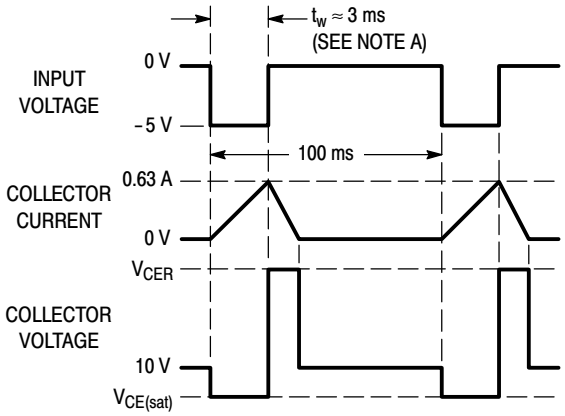

Figure 8. Inductive Load Switching