TIP29, A, B, C (NPN), TIP30, A, B, C (PNP)

Complementary Silicon Plastic Power Transistors

Designed for use in general purpose amplifier and switching applications. Compact TO−220 AB package.

Features

- Pb−Free Packages are Available*

1 AMPERE POWER TRANSISTORS COMPLEMENTARY SILICON 40, 60, 80, 100 VOLTS, 80 WATTS

MAXIMUM RATINGS

Rating	Symbol	29 30	29A 30A	29B 30B	29C 30C	Unit
Collector − Emitter Voltage	V_{CEO}	40	60	80	100	Vdc
Collector − Base Voltage	V_{CB}	40	60	80	100	Vdc
Emitter − Base Voltage	V_{EB}	5.0				Vdc
Collector Current − Continuous − Peak	I_C	 1.0 3.0				Adc
Base Current	I_B	0.4				Adc
Total Power Dissipation @ T_C = 25°C Derate above 25°C	P_D	30 0.24				W W/°C
Total Power Dissipation @ T_A = 25°C Derate above 25°C	P_D	2.0 0.016				W W/°C
Unclamped Inductive Load Energy (Note 1)	E	32				mJ
Operating and Storage Junction Temperature Range	T_J, T_{stg}	−65 to +150				°C

THERMAL CHARACTERISTICS

Characteristic	Symbol	Max	Unit
Thermal Resistance, Junction−to−Ambient	$R_{\theta JA}$	62.5	°C/W
Thermal Resistance, Junction−to−Case	$R_{\theta JC}$	4.167	°C/W

Stresses exceeding Maximum Ratings may damage the device. Maximum Ratings are stress ratings only. Functional operation above the Recommended Operating Conditions is not implied. Extended exposure to stresses above the Recommended Operating Conditions may affect device reliability.

1. This rating based on testing with L_C = 20 mH, R_{BE} = 100 Ω, V_{CC} = 10 V, I_C = 1.8 A, P.R.F = 10 Hz

*For additional information on our Pb−Free strategy and soldering details, please download the ON Semiconductor Soldering and Mounting Techniques Reference Manual, SOLDERRM/D.

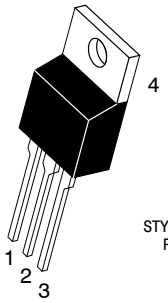

TO−220AB CASE 221A STYLE 1

STYLE 1:
PIN 1. BASE
2. COLLECTOR
3. EMITTER
4. COLLECTOR

MARKING DIAGRAM

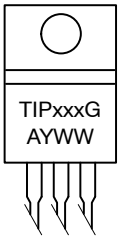

TIPxxx = Device Code:
29, 29A, 29B, 29C
30, 30A, 30B, 30C
A = Assembly Location
Y = Year
WW = Work Week
G = Pb−Free Package

ORDERING INFORMATION

See detailed ordering and shipping information in the package dimensions section on page 2 of this data sheet.

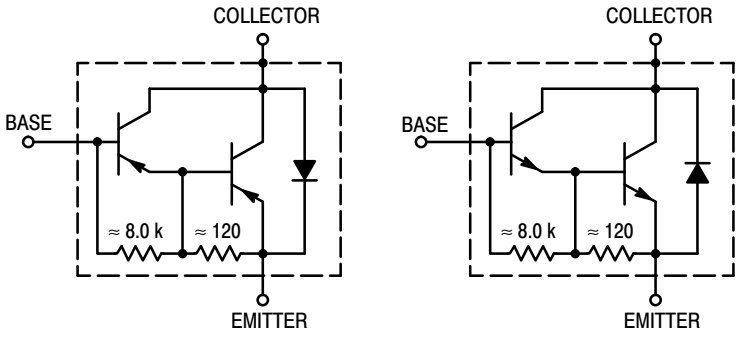

Figure 1. Darlington Circuit Schematic

ORDERING INFORMATION

Device	Package	Shipping
TIP29	TO−220	50 Units / Rail
TIP29G	TO−220 (Pb−Free)	50 Units / Rail
TIP29A	TO−220	50 Units / Rail
TIP29AG	TO−220 (Pb−Free)	50 Units / Rail
TIP29B	TO−220	50 Units / Rail
TIP29BG	TO−220 (Pb−Free)	50 Units / Rail
TIP29C	TO−220	50 Units / Rail
TIP29CG	TO−220 (Pb−Free)	50 Units / Rail
TIP30	TO−220	50 Units / Rail
TIP30G	TO−220 (Pb−Free)	50 Units / Rail
TIP30A	TO−220	50 Units / Rail
TIP30AG	TO−220 (Pb−Free)	50 Units / Rail
TIP30B	TO−220	50 Units / Rail
TIP30BG	TO−220 (Pb−Free)	50 Units / Rail
TIP30C	TO−220	50 Units / Rail
TIP30CG	TO−220 (Pb−Free)	50 Units / Rail

ELECTRICAL CHARACTERISTICS (T_C = 25°C unless otherwise noted)

Characteristic	Symbol	Min	Max	Unit
OFF CHARACTERISTICS				
Collector−Emitter Sustaining Voltage (I_C = 30 mAdc, I_B = 0) (Note 2)	$V_{CEO(sus)}$			Vdc
TIP29, TIP30		40	–	
TIP29A, TIP30A		60	–	
TIP29B, TIP30B		80	–	
TIP29C, TIP30C		100	–	
Collector Cutoff Current	I_{CEO}			mAdc
(V_{CE} = 30 Vdc, I_B = 0) TIP29, TIP29A, TIP30, TIP30A		–	0.3	
(V_{CE} = 60 Vdc, I_B = 0) TIP29B, TIP29C, TIP30B, TIP30C		–	0.3	
Collector Cutoff Current	I_{CES}			μAdc
(V_{CE} = 40 Vdc, V_{EB} = 0) TIP29, TIP30		–	200	
(V_{CE} = 60 Vdc, V_{EB} = 0) TIP29A, TIP30A		–	200	
(V_{CE} = 80 Vdc, V_{EB} = 0) TIP29B, TIP30B		–	200	
(V_{CE} = 100 Vdc, V_{EB} = 0) TIP29C, TIP30C		–	200	
Emitter Cutoff Current (V_{BE} = 5.0 Vdc, I_C = 0)	I_{EBO}	–	1.0	mAdc
ON CHARACTERISTICS (Note 2)				
DC Current Gain (I_C = 0.2 Adc, V_{CE} = 4.0 Vdc)	h_{FE}	40	–	–
(I_C = 1.0 Adc, V_{CE} = 4.0 Vdc)		15	75	
Collector−Emitter Saturation Voltage (I_C = 1.0 Adc, I_B = 125 mAdc)	$V_{CE(sat)}$	–	0.7	Vdc
Base−Emitter On Voltage (I_C = 1.0 Adc, V_{CE} = 4.0 Vdc)	$V_{BE(on)}$	–	1.3	Vdc
DYNAMIC CHARACTERISTICS				
Current−Gain − Bandwidth Product (Note 3) (I_C = 200 mAdc, V_{CE} = 10 Vdc, f_{test} = 1.0 MHz)	f_T	3.0	–	MHz
Small−Signal Current Gain (I_C = 0.2 Adc, V_{CE} = 10 Vdc, f = 1.0 kHz)	h_{fe}	20	–	–

2. Pulse Test: Pulse Width ≤ 300 μs, Duty Cycle ≤ 2.0%
3. $f_T = |h_{fe}| \bullet f_{test}$