STW200NF03

N-CHANNEL 30V - 0.002 Ω - 120A TO-247
ULTRA LOW ON-RESISTANCE STripFET™ II MOSFET

TYPE	V_{DSS}	$R_{DS(on)}$	I_D
STW200NF03	30V	<0.0028Ω	120A

- TYPICAL R_{DS}(on) = 0.002 Ω
- 100% AVALANCHE TESTED

DESCRIPTION

This Power MOSFET series realized with STMicroelectronics unique STripFET process has specifically been designed to minimize input capacitance and gate charge. It is particularly suitable in OR-ing function circuits and synchronous rectification.

APPLICATIONS

- HIGH-EFFICIENCY DC-DC CONVERTERS
- HIGH CURRENT, HIGH SWITCHING SPEED
- OR-ING FUNCTION

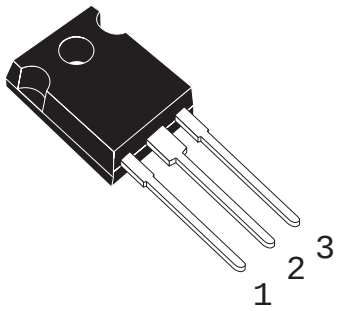

TO-247

INTERNAL SCHEMATIC DIAGRAM

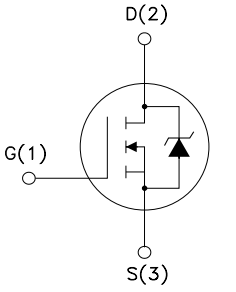

ABSOLUTE MAXIMUM RATINGS

Symbol	Parameter	Value	Unit
V_{DS}	Drain-source Voltage (V_{GS} = 0)	30	V
V_{DGR}	Drain-gate Voltage (R_{GS} = 20 kΩ)	30	V
V_{GS}	Gate- source Voltage	± 20	V
I_D(•)	Drain Current (continuous) at T_C = 25°C	120	A
I_D	Drain Current (continuous) at T_C = 100°C	120	A
I_{DM}(••)	Drain Current (pulsed)	480	A
P_{tot}	Total Dissipation at T_C = 25°C	350	W
	Derating Factor	2.33	W/°C
dv/dt (1)	Peak Diode Recovery voltage slope	1.5	V/ns
E_{AS} (2)	Single Pulse Avalanche Energy	4	J
T_{stg}	Storage Temperature	-55 to 175	°C
T_j	Operating Junction Temperature		

(••) Pulse width limited by safe operating area.
(•)Current limited by package

(1) I_{SD} ≤120A, di/dt ≤200A/µs, V_{DD} ≤ $V_{(BR)DSS}$, T_j ≤ T_{JMAX}.
(2) Starting T_j = 25 ºC, I_D = 60 A, V_{DD}= 15V

THERMAL DATA

$R_{thj\text{-}case}$	Thermal Resistance Junction-case	Max	0.43	°C/W
$R_{thj\text{-}amb}$	Thermal Resistance Junction-ambient	Max	50	°C/W
T_l	Maximum Lead Temperature For Soldering Purpose	Typ	300	°C

ELECTRICAL CHARACTERISTICS (T_{case} = 25 °C unless otherwise specified)

OFF

Symbol	Parameter	Test Conditions	Min.	Typ.	Max.	Unit
$V_{(BR)DSS}$	Drain-source Breakdown Voltage	I_D = 250 µA, V_{GS} = 0	30			V
I_{DSS}	Zero Gate Voltage Drain Current (V_{GS} = 0)	V_{DS} = Max Rating V_{DS} = Max Rating T_C = 125°C			1 10	µA µA
I_{GSS}	Gate-body Leakage Current (V_{DS} = 0)	V_{GS} = ± 20V			±100	nA

ON (1)

Symbol	Parameter	Test Conditions	Min.	Typ.	Max.	Unit
$V_{GS(th)}$	Gate Threshold Voltage	V_{DS} = V_{GS} I_D = 250 µA	2	3	4	V
$R_{DS(on)}$	Static Drain-source On Resistance	V_{GS} = 10 V I_D = 60 A		0.002	0.0028	Ω

DYNAMIC

Symbol	Parameter	Test Conditions	Min.	Typ.	Max.	Unit
g_{fs} (*)	Forward Transconductance	V_{DS} = 15 V I_D = 60 A		200		S
C_{iss} C_{oss} C_{rss}	Input Capacitance Output Capacitance Reverse Transfer Capacitance	V_{DS} = 25V, f = 1 MHz, V_{GS} = 0		10 3.35 385		nF nF pF

ELECTRICAL CHARACTERISTICS (continued)

SWITCHING ON

Symbol	Parameter	Test Conditions	Min.	Typ.	Max.	Unit
$t_{d(on)}$ t_r	Turn-on Delay Time Rise Time	V_{DD} = 15 V I_D = 60 A R_G = 4.7 Ω V_{GS} = 10 V (Resistive Load, Figure 3)		50 300		ns ns
Q_g Q_{gs} Q_{gd}	Total Gate Charge Gate-Source Charge Gate-Drain Charge	V_{DD}=15V I_D=120A V_{GS}= 10 V (see test circuit, Figure 4)		210 63.5 63.5	280	nC nC nC

SWITCHING OFF

Symbol	Parameter	Test Conditions	Min.	Typ.	Max.	Unit
$t_{d(off)}$ t_f	Turn-off Delay Time Fall Time	V_{DD} = 15 V I_D = 60 A R_G = 4.7Ω, V_{GS} = 10 V (Resistive Load, Figure 3)		100 80		ns ns

SOURCE DRAIN DIODE

Symbol	Parameter	Test Conditions	Min.	Typ.	Max.	Unit
I_{SD} I_{SDM} (•)	Source-drain Current Source-drain Current (pulsed)				120 480	A A
V_{SD} (*)	Forward On Voltage	I_{SD} = 120 A V_{GS} = 0			1.3	V
t_{rr} Q_{rr} I_{RRM}	Reverse Recovery Time Reverse Recovery Charge Reverse Recovery Current	I_{SD} = 120 A di/dt = 100A/µs V_{DD} = 20 V T_j = 150°C (see test circuit, Figure 5)		90 250 5.5		ns nC A

(*)Pulsed: Pulse duration = 300 µs, duty cycle 1.5 %.
(•)Pulse width limited by safe operating area.

Safe Operating Area

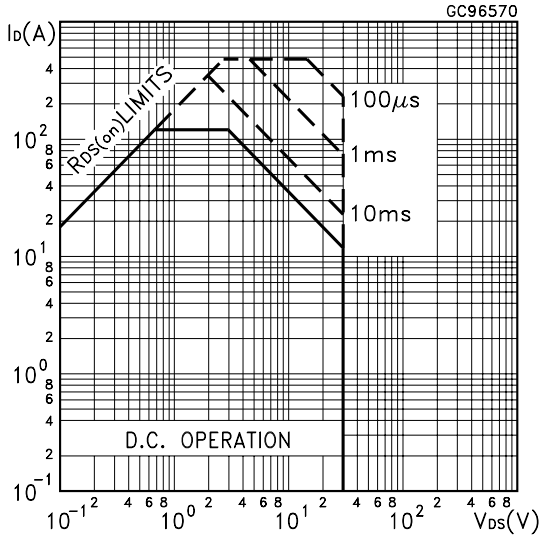
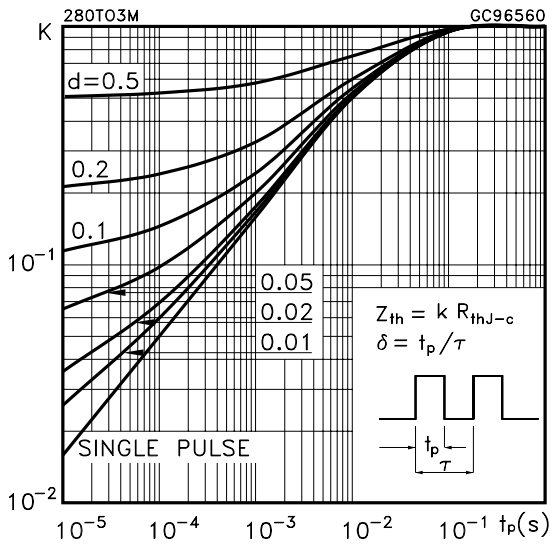
Thermal Impedance