STD7NM50N - STD7NM50N-1
STF7NM50N - STP7NM50N

N-channel 500V - 0.70Ω - 5A - TO-220 - TO-220FP - IPAK - DPAK
Second generation MDmesh™ Power MOSFET

Features

Type	V_{DSS} (@Tjmax)	$R_{DS(on)}$	I_D
STD7NM50N	550V	<0.78Ω	5A
STD7NM50N-1	550V	<0.78Ω	5A
STF7NM50N	550V	<0.78Ω	5A (1)
STP7NM50N	550V	<0.78Ω	5A

1. Limited only by maximum temperature allowed

- 100% avalanche tested
- Low input capacitance and gate charge
- Low gate input resistance

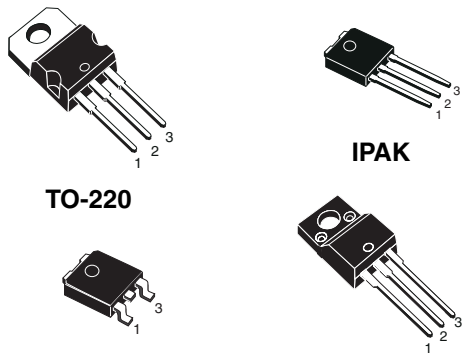

Description

This device is realized with the second generation of MDmesh™ technology. This revolutionary Power MOSFET associates a new vertical structure to the company's strip layout to yield one of the world's lowest on-resistance and gate charge. It is therefore suitable for the most demanding high efficiency converters

Application

- Switching application

Internal schematic diagram

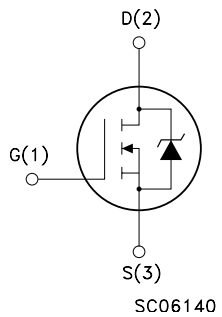

Order codes

Part number	Marking	Package	Packaging
STD7NM50N-1	D7NM50N	IPAK	Tube
STD7NM50N	D7NM50N	DPAK	Tape & reel
STF7NM50N	F7NM50N	TO-220FP	Tube
STP7NM50N	P7NM50N	TO-220	Tube

1 Electrical ratings

Table 1. Absolute maximum ratings

Symbol	Parameter	Value		Unit
		TO-220 / DPAK IPAK	TO-220FP	
V_{DS}	Drain-source voltage (V_{GS}=0)	500		V
V_{GS}	Gate-source voltage	± 25		V
I_D	Drain current (continuous) at T_C = 25°C	5	5 (1)	A
I_D	Drain current (continuous) at T_C = 100°C	3	3 (1)	A
I_{DM} (2)	Drain current (pulsed)	20	20 (1)	A
P_{TOT}	Total dissipation at T_C = 25°C	45	20	W
dv/dt (3)	Peak diode recovery voltage slope	15		V/ns
V_{ISO}	Insulation withstand voltage (RMS) from all three leads to external heat sink (t=1s;T_C=25°C)	--	2500	V
T_j T_{stg}	Operating junction temperature Storage temperature	-55 to 150		°C

1. Limited only by maximum temperature allowed
2. Pulse width limited by safe operating area
3. I_{SD} ≤5A, di/dt ≤400A/µs, V_{DD} =80% $V_{(BR)DSS}$

Table 2. Thermal data

Symbol	Parameter	Max value		Unit
		TO-220 / DPAK IPAK	TO-220FP	
Rthj-case	Thermal resistance junction-case max	2.78	6.25	°C/W
Rthj-amb	Thermal resistance junction-amb max	62.5		°C/W
T_l	Maximum lead temperature for soldering purpose	300		°C

Table 3. Avalanche characteristics

Symbol	Parameter	Max value	Unit
I_{AS}	Avalanche current, repetitive or not-repetitive (pulse width limited by Tj max)	2	A
E_{AS}	Single pulse avalanche energy (starting Tj=25°C, I_D=I_{AS}, V_{DD}= 50V)	100	mJ

2 Electrical characteristics

(T_{CASE}=25°C unless otherwise specified)

Table 4. On/off states

Symbol	Parameter	Test conditions	Min	Typ	Max	Unit
$V_{(BR)DSS}$	Drain-source breakdown voltage	I_D = 1mA, V_{GS}= 0	500			V
dv/dt(1)	Drain-source voltage slope	Vdd = 400V, Id = 5A, Vgs = 10V		40		V/ns
I_{DSS}	Zero gate voltage drain current (V_{GS} = 0)	V_{DS} = Max rating, V_{DS} = Max rating,Tc = 125°C			1 100	µA µA
I_{GSS}	Gate body leakage current (V_{DS} = 0)	V_{GS} = ±20V			100	nA
$V_{GS(th)}$	Gate threshold voltage	V_{DS}= V_{GS}, I_D = 250µA	2	3	4	V
$R_{DS(on)}$	Static drain-source on resistance	V_{GS}= 10V, I_D=2.5A		0.70	0.78	Ω

1. Characteristics value at turn off on inductive load

Table 5. Dynamic

Symbol	Parameter	Test conditions	Min.	Typ.	Max.	Unit
g_{fs}(1)	Forward transconductance	V_{DS} =15V, I_D= 2.5A		4		S
C_{iss} C_{oss} C_{rss}	Input capacitance Output capacitance Reverse transfer capacitance	V_{DS} = 50V, f =1 MHz, V_{GS} = 0		400 35 4		pF pF pF
$C_{oss\ eq.}$(2)	Equivalent output capacitance	V_{GS} = 0V, V_{DS} = 0V to 400V		67		pF
Rg	Gate input resistance	f=1MHz Gate DC Bias=0 Test signal level=20mV Open drain		6		Ω
Q_g Q_{gs} Q_{gd}	Total gate charge Gate-source charge Gate-drain charge	V_{DD} = 400V, I_D = 5A V_{GS} = 10V		12 2 6		nC nC nC

1. Pulsed: pulse duration = 300µs, duty cycle 1.5%
2. $C_{oss\ eq.}$ is defined as a constant equivalent capacitance giving the same charging time as C_{oss} when V_{DS} increases from 0 to 80% V_{DSS}

Table 6. Switching times

Symbol	Parameter	Test conditions	Min	Typ	Max	Unit
$t_{d(on)}$ t_r $t_{d(off)}$ t_f	Turn-on delay time Rise time Turn-off delay time Fall time	V_{DD} = 250V, I_D = 2.5A, R_G = 4.7Ω, V_{GS} = 10V		7 5 40 9		ns ns ns ns

Table 7. Source drain diode

Symbol	Parameter	Test conditions	Min	Typ	Max	Unit
I_{SD} I_{SDM}(1)	Source-drain current Source-drain current (pulsed)				5 20	A A
V_{SD}(2)	Forward on voltage	I_{SD} = 5A, V_{GS} = 0			1.3	V
t_{rr} Q_{rr} I_{RRM}	Reverse recovery time Reverse recovery charge Reverse recovery current	I_{SD} =5A, di/dt =100A/µs, V_{DD}=100V, Tj=25°C		250 2 13		ns µC A
t_{rr} Q_{rr} I_{RRM}	Reverse recovery time Reverse recovery charge Reverse recovery current	I_{SD} =5A, di/dt =100A/µs, V_{DD}=100V, Tj=150°C		330 2 13		ns µC A

1. Pulse width limited by safe operating area
2. Pulsed: pulse duration = 300µs, duty cycle 1.5%

2.1 Electrical characteristics (curves)

Figure 1. Safe operating area for TO-220 / DPAK / IPAK

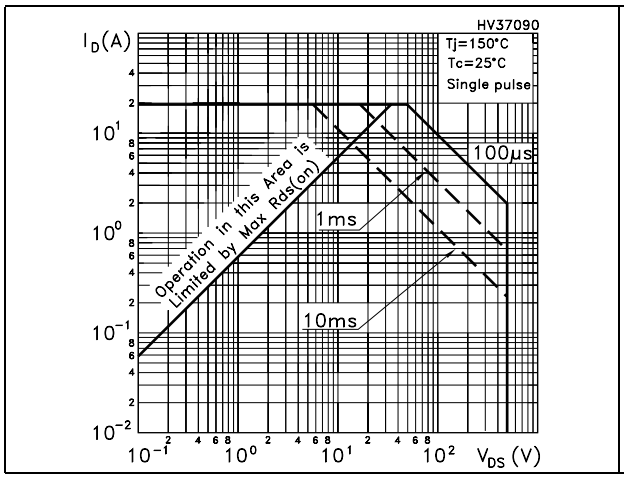

Figure 2. Thermal impedance for TO-220 / DPAK / IPAK

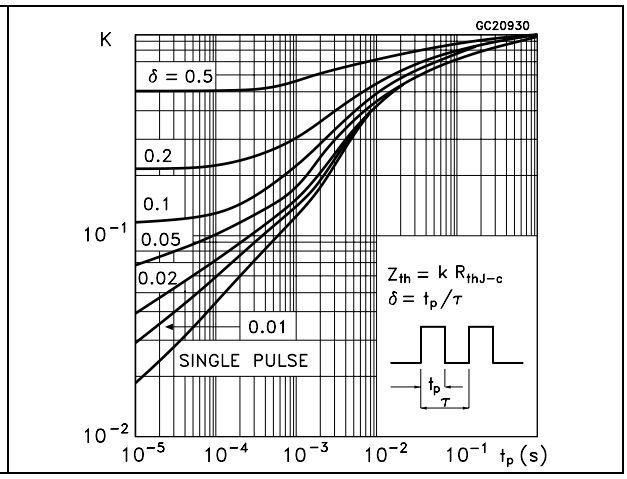

Figure 3. Safe operating area for TO-220FP

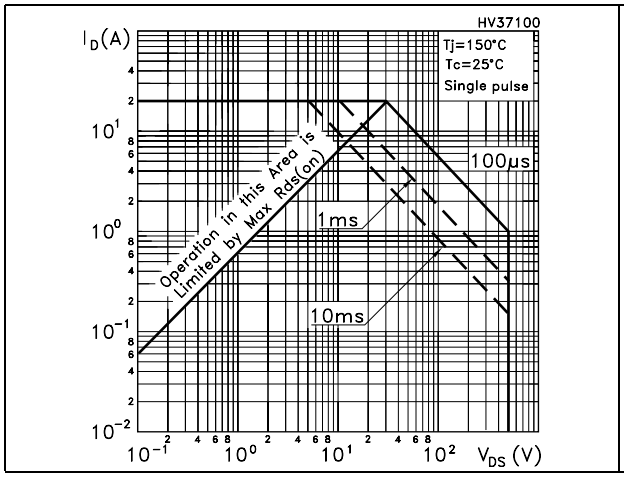

Figure 4. Thermal impedance for TO-220FP

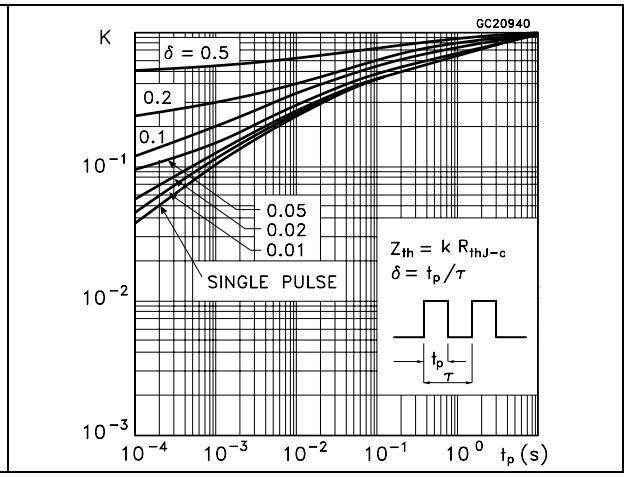

Figure 5. Output characteristics

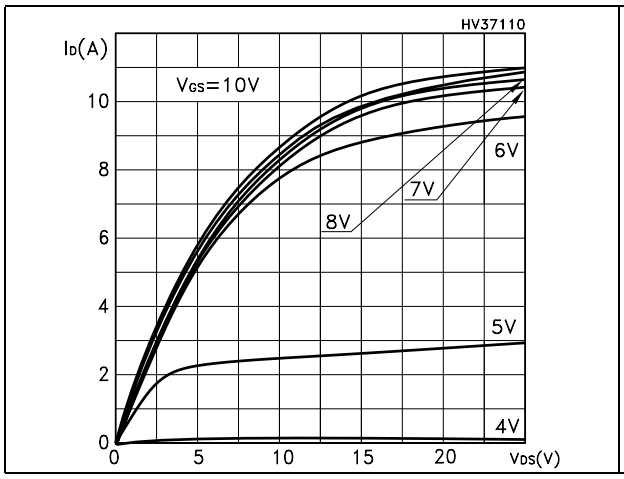

Figure 6. Transfer characteristics