STB55NF06 - STB55NF06-1
STP55NF06 - STP55NF06FP

N-channel 60V - 0.015Ω - 50A - D^2PAK/I^2PAK/TO-220/TO-220FP
STripFET™ II Power MOSFET

General features

Type	V_{DSS}	$R_{DS(on)}$	I_D
STB55NF06	60V	<0.018Ω	50A
STB55NF06-1	60V	<0.018Ω	50A
STP55NF06	60V	<0.018Ω	50A
STP55NF06FP	60V	<0.018Ω	50A (1)

1. Refer to soa for the max allowable current value on FP-type due to Rth value

- 100% avalanche tested
- Exceptional dv/dt capability

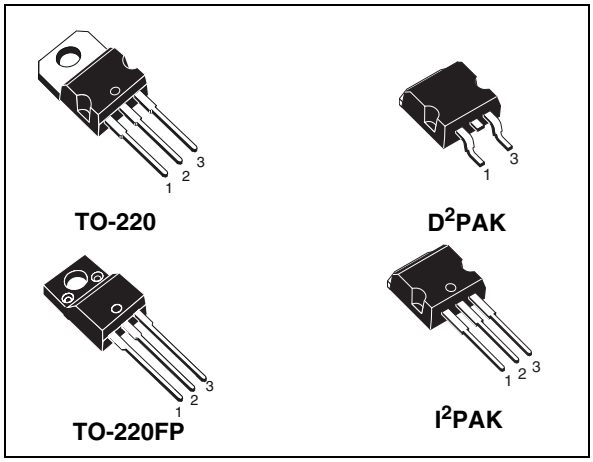

Description

This Power MOSFET is the latest development of STMicroelectronis unique "Single Feature Size™" strip-based process. The resulting transistor shows extremely high packing density for low on-resistance, rugged avalanche characteristics and less critical alignment steps therefore a remarkable manufacturing reproducibility.

Applications

- Switching application

Internal schematic diagram

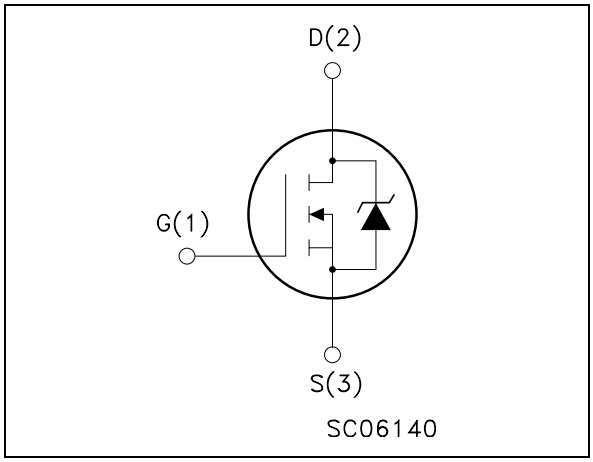

Order codes

Part number	Marking	Package	Packaging
STB55NF06T4	B55NF06	D^2PAK	Tape & reel
STB55NF06-1	B55NF06	I^2PAK	Tube
STP55NF06FP	P55NF06FP	TO-220FP	Tube
STP55NF06	P55NF06	TO-220	Tube

1 Electrical ratings

Table 1. Absolute maximum ratings

Symbol	Parameter	Value		Unit
		TO-220 D^2PAK I^2PAK	TO-220FP	
V_{DS}	Drain-source voltage (V_{GS} = 0)	60		V
V_{GS}	Gate- source voltage	± 20		V
I_D	Drain current (continuous) at T_C = 25°C	50	50(1)	A
I_D	Drain current (continuous) at T_C = 100°C	35	35(1)	A
I_{DM}(2)	Drain current (pulsed)	200	200(1)	A
P_{tot}	Total dissipation at T_C = 25°C	110	30	W
	Derating Factor	0.73	0.20	W/°C
E_{AS} (3)	Single pulse avalanche energy	340		mJ
dv/dt (4)	Peak diode recovery voltage slope	7		V/ns
V_{ISO}	Insulation withstand voltage (DC)	-	2500	V
T_{stg}	Storage temperature	-55 to 175		°C
T_j	Max. operating junction temperature			

1. Refer to soa for the max allowable current value on FP-type due to Rth value
2. Pulse width limited by safe operating area.
3. Starting Tj = 25°C, V_{DD} = 30V, I_D =25A
4. $I_{SD} \leq 50A$, di/dt $\leq 400A/\mu s$, $V_{DD} \leq V_{(BR)DSS}$, Tj $\leq T_{JMAX}$

Table 2. Thermal data

		TO-220 D^2PAK I^2PAK	TO-220FP	
Rthj-case	Thermal resistance junction-case max	1.36	5	°C/W
Rthj-amb	Thermal resistance junction-ambient max	62.5		°C/W
T_J	Maximum lead temperature for soldering purpose(1)	300		°C

1. for 10 sec. 1.6mm from case

2 Electrical characteristics

(T_{CASE}=25°C unless otherwise specified)

Table 3. On/off states

Symbol	Parameter	Test conditions	Min.	Typ.	Max.	Unit
$V_{(BR)DSS}$	Drain-source breakdown voltage	I_D = 250µA, V_{GS} =0	60			V
I_{DSS}	Zero gate voltage drain current (V_{GS} = 0)	V_{DS} = max ratings V_{DS} = max ratings, T_C = 125°C			1 10	µA µA
I_{GSS}	Gate-body leakage current (V_{DS} = 0)	V_{GS} = ± 20V			±100	nA
$V_{GS(th)}$	Gate threshold voltage	V_{DS} = V_{GS}, I_D = 250µA	2	3	4	V
$R_{DS(on)}$	Static drain-source on resistance	V_{GS} = 10V, I_D = 27.5A		0.015	0.018	Ω

Table 4. Dynamic

Symbol	Parameter	Test conditions	Min.	Typ.	Max.	Unit
g_{fs} (1)	Forward transconductance	V_{DS} = 15V, I_D = 27.5A		18		S
C_{iss} C_{oss} C_{rss}	Input capacitance Output capacitance Reverse transfer capacitance	V_{DS} = 25V, f = 1MHz, V_{GS} = 0		1300 300 105		pF pF pF
$t_{d(on)}$ t_r $t_{d(off)}$ t_f	Turn-on delay time Rise time Turn-off delay time Fall time	V_{DD} = 30V, I_D = 27.5A R_G = 4.7Ω V_{GS} = 10V		20 50 36 15		ns ns ns ns
Q_g Q_{gs} Q_{gd}	Total gate charge Gate-source charge Gate-drain charge	V_{DD} = 48V, I_D = 55A, V_{GS} = 10V		44.5 10.5 17.5	60	nC nC nC

1. Pulsed: Pulse duration = 300 µs, duty cycle 1.5 %.

Table 5. Source drain diode

Symbol	Parameter	Test conditions	Min.	Typ.	Max.	Unit
I_{SD} I_{SDM} (1)	Source-drain current Source-drain current (pulsed)				50 200	A A
V_{SD} (2)	Forward on voltage	I_{SD} = 50A, V_{GS} = 0			1.5	V
t_{rr} Q_{rr} I_{RRM}	Reverse recovery time Reverse recovery charge Reverse recovery current	I_{SD} = 50A, di/dt = 100A/µs, V_{DD} = 30V, T_j = 150°C		75 170 4.5		ns nC A

1. Pulse width limited by safe operating area.
2. Pulsed: Pulse duration = 300 µs, duty cycle 1.5 %

2.1 Electrical characteristics (curves)

Figure 1. Safe operating area for TO-220/D²PAK/I²PAK

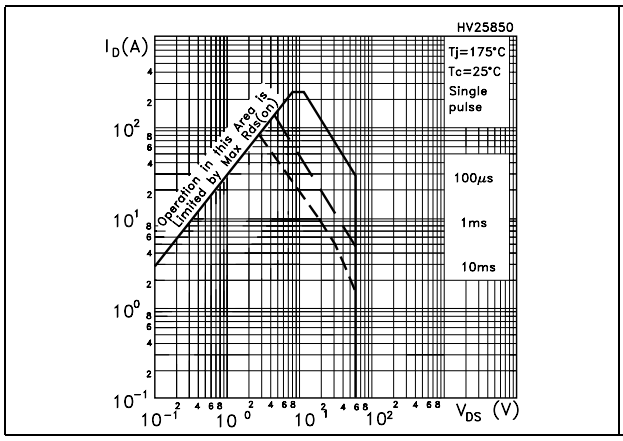

Figure 2. Thermal impedance TO-220/D²PAK/I²PAK

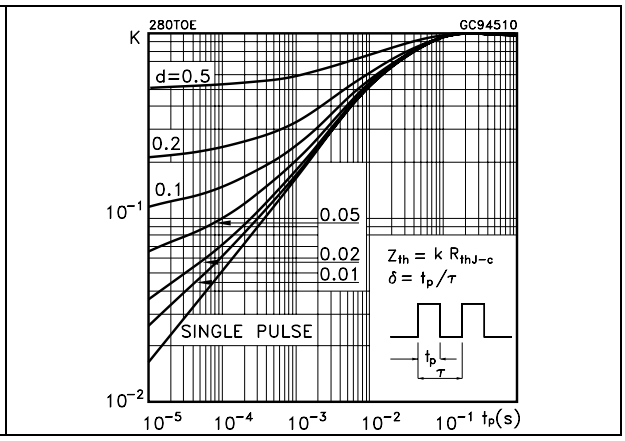

Figure 3. Safe operating area for TO-220FP

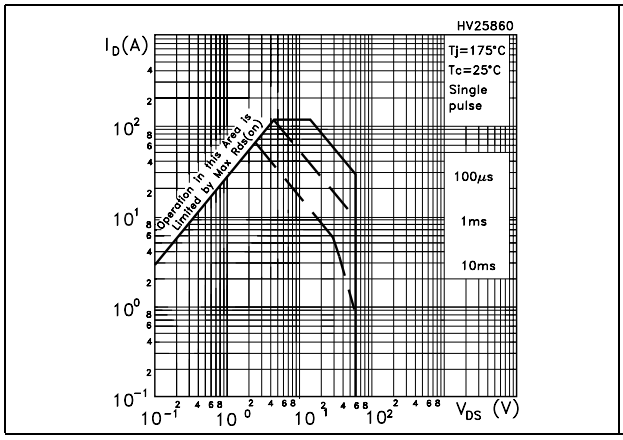

Figure 4. Thermal impedance TO-220FP

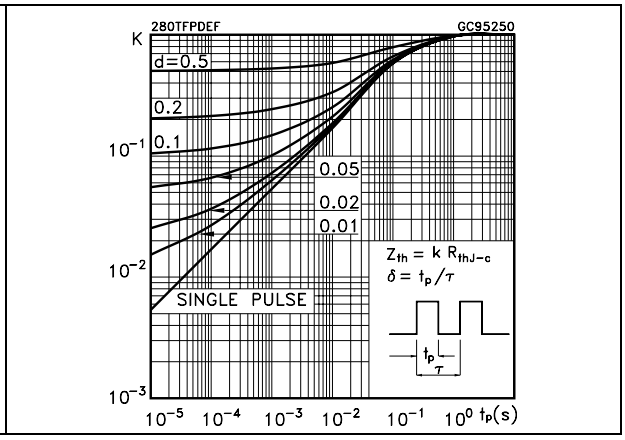

Figure 5. Output characterisics

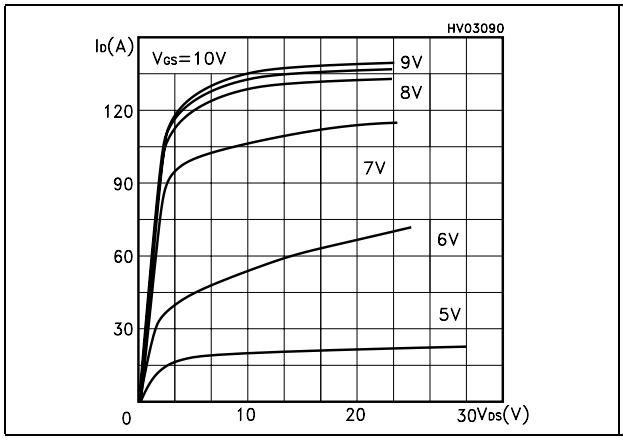

Figure 6. Transfer characteristics