SFT1423

N-Channel Power MOSFET
500V, 2A, 4.9Ω, Single TP/TP-FA

Features

- ON-resistance
- 4V drive
- Protection diode in

Specifications

Absolute Maximum Ratings at Ta=25°C

Parameter	Symbol	Conditions	Ratings	Unit
Drain-to-Source Voltage	V_{DSS}		500	V
Gate-to-Source Voltage	V_{GSS}		±20	V
Drain Current (DC)	I_D		2	A
Drain Current (PW≤10μs)	I_{DP}	PW≤10μs, duty cycle≤1%	10	A
Allowable Power Dissipation	P_D		1.0	W
		Tc=25°C	20	W
Channel Temperature	Tch		150	°C
Storage Temperature	Tstg		−55 to +150	°C

Stresses exceeding Maximum Ratings may damage the device. Maximum Ratings are stress ratings only. Functional operation above the Recommended Operating Conditions is not implied. Extended exposure to stresses above the Recommended Operating Conditions may affect device reliability.

Package Dimensions unit : mm (typ)
7518-004

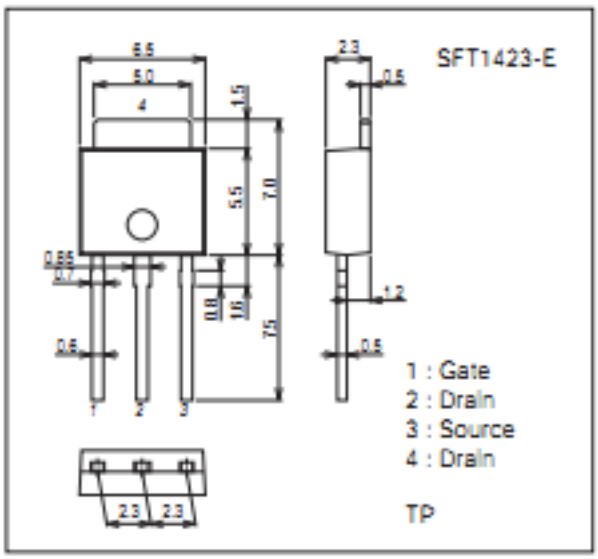

Package Dimensions unit : mm (typ)
7003-004

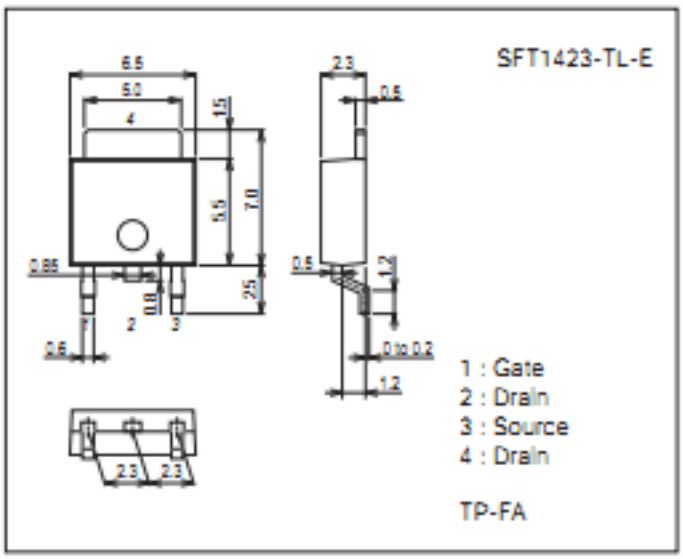

Product & Package Information

- Package : TP
- JEITA, JEDEC : SC-64, TO-251
- Minimum Packing Quantity : 500 pcs./bag

- Package : TP-FA
- JEITA, JEDEC : SC-63, TO-252
- Minimum Packing Quantity : 700 pcs./reel

Marking
(TP, TP-FA)

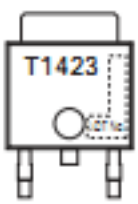

Packing Type (TP-FA) : TL

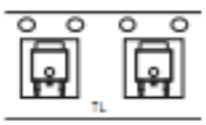

Electrical Connection

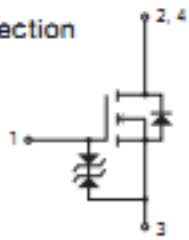

Electrical Characteristics at Ta=25°C

Parameter	Symbol	Conditions	Ratings			Unit
			min	typ	max	
Drain-to-Source Breakdown Voltage	$V_{(BR)DSS}$	I_D=10mA, V_{GS}=0V	500			V
Zero-Gate Voltage Drain Current	I_{DSS}	V_{DS}=400V, V_{GS}=0V			100	μA
Gate-to-Source Leakage Current	I_{GSS}	V_{GS}=±16V, V_{DS}=0V			±10	μA
Cutoff Voltage	$V_{GS(off)}$	V_{DS}=10V, I_D=1mA	1.2		2.6	V
Forward Transfer Admittance	|yfs|	V_{DS}=10V, I_D=1A	1.1	1.9		S
Static Drain-to-Source On-State Resistance	$R_{DS(on)1}$	I_D=1A, V_{GS}=10V		3.8	4.9	Ω
	$R_{DS(on)2}$	I_D=0.5A, V_{GS}=4V		3.9	5	Ω
Input Capacitance	Ciss	V_{DS}=30V, f=1MHz		175		pF
Output Capacitance	Coss			32		pF
Reverse Transfer Capacitance	Crss			6		pF
Turn-ON Delay Time	$t_{d(on)}$	See specified Test Circuit.		7.4		ns
Rise Time	t_r			8.8		ns
Turn-OFF Delay Time	$t_{d(off)}$			42		ns
Fall Time	t_f			27		ns
Total Gate Charge	Qg	V_{DS}=200V, V_{GS}=10V, I_D=2A		8.7		nC
Gate-to-Source Charge	Qgs			1.1		nC
Gate-to-Drain "Miller" Charge	Qgd			2.9		nC
Diode Forward Voltage	V_{SD}	I_S=2A, V_{GS}=0V		0.9	1.2	V

Switching Time Test Circuit

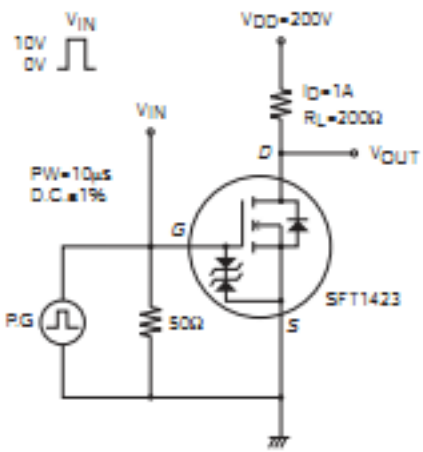

Ordering Information

Device	Package	Shipping	memo
SFT1423-E	TP	500pcs./bag	Pb Free
SFT1423-TL-E	TP-FA	700pcs./reel	