2SK4112

Switching Regulator Applications

- Low drain-source ON resistance: $R_{DS\ (ON)}$ = 0.75 Ω (typ.)
- High forward transfer admittance: $|Y_{fs}|$ = 5.5 S (typ.)
- Low leakage current: I_{DSS} = 100 μA (V_{DS} = 600 V)
- Enhancement mode: V_{th} = 2.0 to 4.0 V (V_{DS} = 10 V, I_D = 1 mA)

Unit: mm

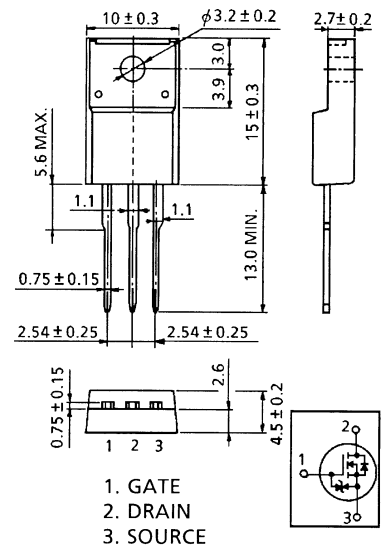

JEDEC	—
JEITA	SC-67
TOSHIBA	2-10R1B

Weight: 1.9 g (typ.)

Absolute Maximum Ratings (Ta = 25°C)

Characteristics		Symbol	Rating	Unit
Drain-source voltage		V_{DSS}	600	V
Drain-gate voltage (R_{GS} = 20 kΩ)		V_{DGR}	600	V
Gate-source voltage		V_{GSS}	±30	V
Drain current	DC (Note 1)	I_D	10	A
	Pulse (t = 1 ms) (Note 1)	I_{DP}	30	
Drain power dissipation (Tc = 25°C)		P_D	45	W
Single pulse avalanche energy (Note 2)		E_{AS}	251	mJ
Avalanche current		I_{AR}	10	A
Repetitive avalanche energy (Note 3)		E_{AR}	4.5	mJ
Channel temperature		T_{ch}	150	°C
Storage temperature range		T_{stg}	-55~150	°C

Note: Using continuously under heavy loads (e.g. the application of high temperature/current/voltage and the significant change in temperature, etc.) may cause this product to decrease in the reliability significantly even if the operating conditions (i.e. operating temperature/current/voltage, etc.) are within the absolute maximum ratings. Please design the appropriate reliability upon reviewing the Toshiba Semiconductor Reliability Handbook ("Handling Precautions"/Derating Concept and Methods) and individual reliability data (i.e. reliability test report and estimated failure rate, etc).

Thermal Characteristics

Characteristics	Symbol	Max	Unit
Thermal resistance, channel to case	$R_{th\ (ch-c)}$	2.78	°C/W
Thermal resistance, channel to ambient	$R_{th\ (ch-a)}$	62.5	°C/W

Note 1: Ensure that the channel temperature does not exceed 150℃.

Note 2: V_{DD} = 90 V, T_{ch} = 25°C, L = 4.39 mH, I_{AR} = 10 A, R_G = 25 Ω

Note 3: Repetitive rating: pulse width limited by maximum channel temperature

This transistor is an electrostatic-sensitive device. Please handle with caution.

Electrical Characteristics (Ta = 25°C)

Characteristics		Symbol	Test Condition	Min	Typ.	Max	Unit
Gate leakage current		I_{GSS}	V_{GS} = ±25 V, V_{DS} = 0 V	—	—	±10	μA
Gate-source breakdown voltage		$V_{(BR)\ GSS}$	I_G =±10 μA, V_{DS} = 0 V	±30	—	—	V
Drain cut-off current		I_{DSS}	V_{DS} = 600 V, V_{GS} = 0 V	—	—	100	μA
Drain-source breakdown voltage		$V_{(BR)\ DSS}$	I_D = 10 mA, V_{GS} = 0 V	600	—	—	V
Gate threshold voltage		V_{th}	V_{DS} = 10 V, I_D = 1 mA	2.0	—	4.0	V
Drain-source ON resistance		$R_{DS\ (ON)}$	V_{GS} = 10 V, I_D = 4 A	—	0.75	1.0	Ω
Forward transfer admittance		$\lvert Y_{fs} \rvert$	V_{DS} = 10 V, I_D = 4 A	1.5	5.5	—	S
Input capacitance		C_{iss}	V_{DS} = 25 V, V_{GS} = 0 V, f = 1 MHz	—	1300	—	pF
Reverse transfer capacitance		C_{rss}		—	12	—	
Output capacitance		C_{oss}		—	120	—	
Switching time	Rise time	t_r	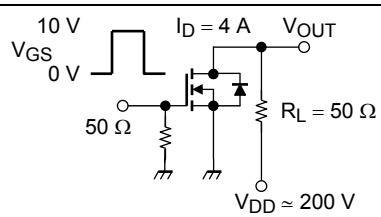	—	20	—	ns
	Turn-on time	t_{on}		—	50	—	
	Fall time	t_f		—	35	—	
	Turn-off time	t_{off}	Duty ≤ 1%, t_w = 10 μs	—	150	—	
Total gate charge		Q_g	V_{DD} ≃ 400 V, V_{GS} = 10 V, I_D = 10 A	—	33	—	nC
Gate-source charge		Q_{gs}		—	18	—	
Gate-drain charge		Q_{gd}		—	15	—	

Source-Drain Ratings and Characteristics (Ta = 25°C)

Characteristics	Symbol	Test Condition	Min	Typ.	Max	Unit
Continuous drain reverse current (Note 1)	I_{DR}	—	—	—	10	A
Pulse drain reverse current (Note 1)	I_{DRP}	—	—	—	30	A
Forward voltage (diode)	V_{DSF}	I_{DR} = 10 A, V_{GS} = 0 V	—	—	−1.7	V
Reverse recovery time	t_{rr}	I_{DR} = 10 A, V_{GS} = 0 V,	—	1500	—	ns
Reverse recovery charge	Q_{rr}	dI_{DR}/dt = 100 A/μs	—	19	—	μC

Marking