2SK2661

Chopper Regulator, DC–DC Converter and Motor Drive Applications

Unit: mm

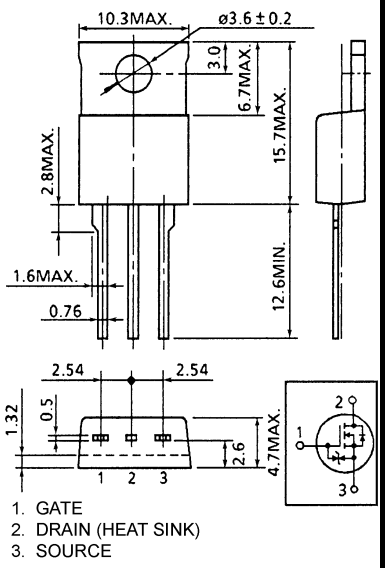

JEDEC	TO-220AB
JEITA	SC-46
TOSHIBA	2-10P1B

Weight: 2.0 g (typ.)

- Low drain–source ON resistance : $R_{DS\ (ON)}$ = 1.35 Ω (typ.)
- High forward transfer admittance : $|Y_{fs}|$ = 4.0 S (typ.)
- Low leakage current : I_{DSS} = 100 μA (max) (V_{DS} = 500 V)
- Enhancement mode : V_{th} = 2.0~4.0 V (V_{DS} = 10 V, I_D = 1 mA)

Absolute Maximum Ratings (Ta = 25°C)

Characteristics		Symbol	Rating	Unit
Drain–source voltage		V_{DSS}	500	V
Drain–gate voltage (R_{GS} = 20 kΩ)		V_{DGR}	500	V
Gate–source voltage		V_{GSS}	±30	V
Drain current	DC (Note 1)	I_D	5	A
	Pulse (Note 1)	I_{DP}	20	A
Drain power dissipation (Tc = 25°C)		P_D	75	W
Single pulse avalanche energy (Note 2)		E_{AS}	180	mJ
Avalanche current		I_{AR}	5	A
Repetitive avalanche energy (Note 3)		E_{AR}	7.5	mJ
Channel temperature		T_{ch}	150	°C
Storage temperature range		T_{stg}	−55~150	°C

Note: Using continuously under heavy loads (e.g. the application of high temperature/current/voltage and the significant change in temperature, etc.) may cause this product to decrease in the reliability significantly even if the operating conditions (i.e. operating temperature/current/voltage, etc.) are within the absolute maximum ratings. Please design the appropriate reliability upon reviewing the Toshiba Semiconductor Reliability Handbook ("Handling Precautions"/Derating Concept and Methods) and individual reliability data (i.e. reliability test report and estimated failure rate, etc).

Thermal Characteristics

Characteristics	Symbol	Max	Unit
Thermal resistance, channel to case	$R_{th\ (ch–c)}$	1.67	°C / W
Thermal resistance, channel to ambient	$R_{th\ (ch–a)}$	83.3	°C / W

Note 1: Ensure that the channel temperature does not exceed 150°C.

Note 2: V_{DD} = 90 V, T_{ch} = 25°C (initial), L = 12.2 mH, R_G = 25 Ω, I_{AR} = 5 A

Note 3: Repetitive rating: pulse width limited by maximum channel temperature

This transistor is an electrostatic-sensitive device.
Please handle with caution.

Electrical Characteristics (Ta = 25°C)

Characteristics		Symbol	Test Condition	Min	Typ.	Max	Unit
Gate leakage current		I_{GSS}	V_{GS} = ±25 V, V_{DS} = 0 V	—	—	±10	μA
Gate–source breakdown voltage		$V_{(BR)\ GSS}$	I_G = ±10 μA, V_{DS} = 0 V	±30	—	—	V
Drain cut–off current		I_{DSS}	V_{DS} = 500 V, V_{GS} = 0 V	—	—	100	μA
Drain–source breakdown voltage		$V_{(BR)\ DSS}$	I_D = 10 mA, V_{GS} = 0 V	500	—	—	V
Gate threshold voltage		V_{th}	V_{DS} = 10 V, I_D = 1 mA	2.0	—	4.0	V
Drain–source ON resistance		$R_{DS\ (ON)}$	V_{GS} = 10 V, I_D = 2.5 A	—	1.35	1.50	Ω
Forward transfer admittance		$\|Y_{fs}\|$	V_{DS} = 10 V, I_D = 2.5 A	2.5	4.0	—	S
Input capacitance		C_{iss}	V_{DS} = 25 V, V_{GS} = 0 V, f = 1 MHz	—	780	—	pF
Reverse transfer capacitance		C_{rss}		—	60	—	
Output capacitance		C_{oss}		—	200	—	
Switching time	Rise time	t_r	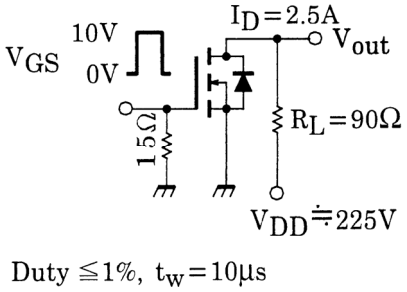	—	12	—	ns
	Turn–on time	t_{on}		—	25	—	
	Fall time	t_f		—	15	—	
	Turn–off time	t_{off}		—	60	—	
Total gate charge (gate–source plus gate–drain)		Q_g	V_{DD} ≈ 400 V, V_{GS} = 10 V, I_D = 5 A	—	17	—	nC
Gate–source charge		Q_{gs}		—	11	—	
Gate–drain (“miller”) Charge		Q_{gd}		—	6	—	

Source–Drain Ratings and Characteristics (Ta = 25°C)

Characteristics	Symbol	Test Condition	Min	Typ.	Max	Unit
Continuous drain reverse current (Note 1)	I_{DR}	—	—	—	5	A
Pulse drain reverse current (Note 1)	I_{DRP}	—	—	—	20	A
Forward voltage (diode)	V_{DSF}	I_{DR} = 5 A, V_{GS} = 0 V	—	—	−1.7	V
Reverse recovery time	t_{rr}	I_{DR} = 5 A, V_{GS} = 0 V dI_{DR} / dt = 100 A / μs	—	1400	—	ns
Reverse recovery charge	Q_{rr}		—	9	—	μC

Marking

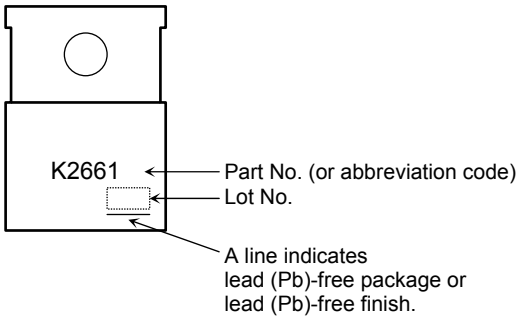

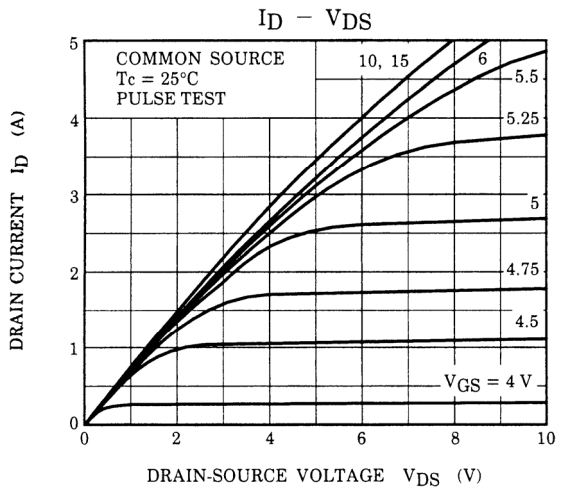
ID – VDS
COMMON SOURCE
Tc = 25°C
PULSE TEST
10, 15
6
5.5
5.25
5
4.75
4.5
VGS = 4 V
DRAIN CURRENT ID (A)
DRAIN-SOURCE VOLTAGE VDS (V)

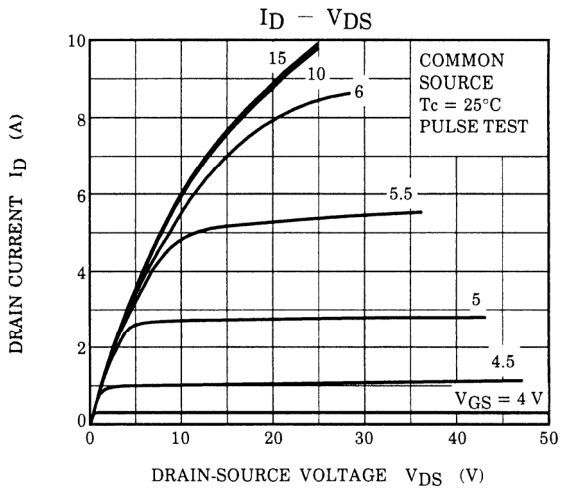
ID – VDS
COMMON
SOURCE
Tc = 25°C
PULSE TEST
15
10
6
5.5
5
4.5
VGS = 4 V
DRAIN CURRENT ID (A)
DRAIN-SOURCE VOLTAGE VDS (V)

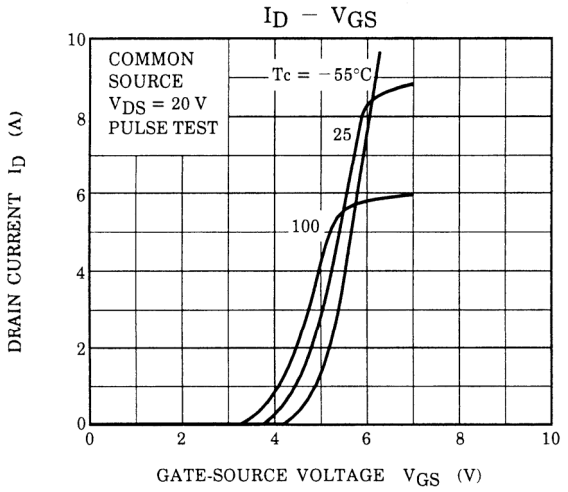
ID – VGS
COMMON
SOURCE
VDS = 20 V
PULSE TEST
Tc = –55°C
25
100
DRAIN CURRENT ID (A)
GATE-SOURCE VOLTAGE VGS (V)

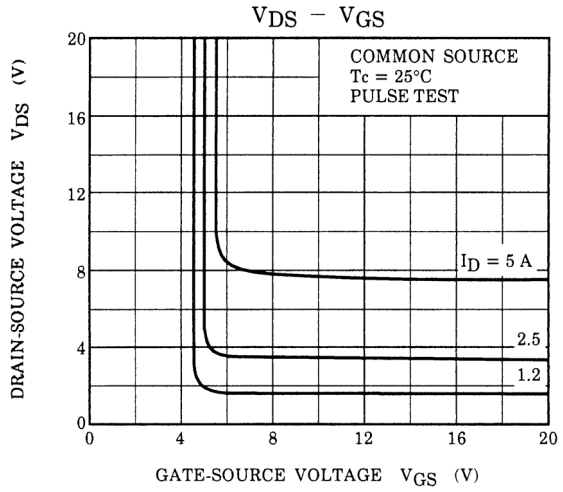
VDS – VGS
COMMON SOURCE
Tc = 25°C
PULSE TEST
ID = 5 A
2.5
1.2
DRAIN-SOURCE VOLTAGE VDS (V)
GATE-SOURCE VOLTAGE VGS (V)

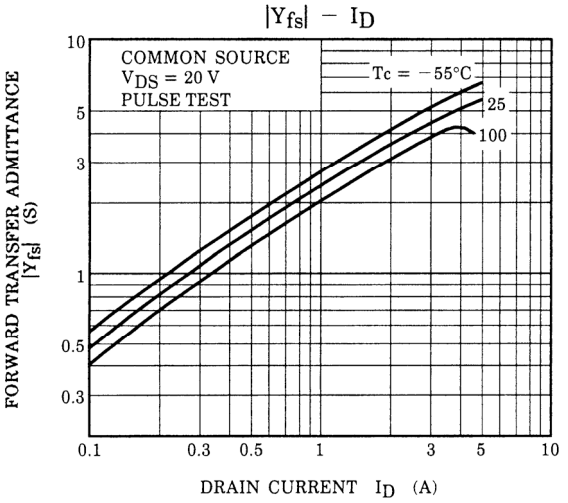
|Yfs| – ID
COMMON SOURCE
VDS = 20 V
PULSE TEST
Tc = –55°C
25
100
FORWARD TRANSFER ADMITTANCE |Yfs| (S)
DRAIN CURRENT ID (A)

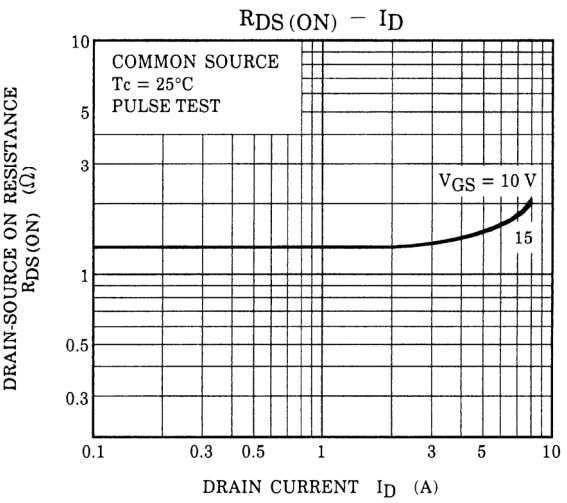
RDS (ON) – ID
COMMON SOURCE
Tc = 25°C
PULSE TEST
VGS = 10 V
15
DRAIN-SOURCE ON RESISTANCE RDS (ON) (Ω)
DRAIN CURRENT ID (A)