2SK2391

Chopper Regulator, DC−DC Converter and Motor Drive Applications

- 4-V gate drive
- Low drain−source ON-resistance : $R_{DS\ (ON)}$ = 66 mΩ (typ.)
- High forward transfer admittance : $|Y_{fs}|$ = 16 S (typ.)
- Low leakage current : I_{DSS} = 100 μA (max) (V_{DS} = 100 V)
- Enhancement mode : V_{th} = 0.8 to 2.0 V (V_{DS} = 10 V, I_D = 1 mA)

Unit: mm

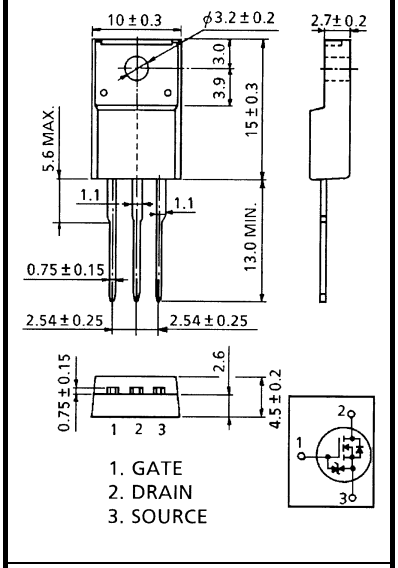

JEDEC	—
JEITA	SC-67
TOSHIBA	2-10R1B

Weight: 1.9 g (typ.)

Absolute Maximum Ratings (Ta = 25°C)

Characteristics		Symbol	Rating	Unit
Drain−source voltage		V_{DSS}	100	V
Drain−gate voltage (R_{GS} = 20 kΩ)		V_{DGR}	100	V
Gate−source voltage		V_{GSS}	±20	V
Drain current	DC (Note 1)	I_D	20	A
	Pulse (Note 1)	I_{DP}	80	A
Drain power dissipation (Tc = 25°C)		P_D	35	W
Single pulse avalanche energy (Note 2)		E_{AS}	208	mJ
Avalanche current		I_{AR}	20	A
Repetitive avalanche energy (Note 3)		E_{AR}	3.5	mJ
Channel temperature		T_{ch}	150	°C
Storage temperature range		T_{stg}	−55 to 150	°C

Note: Using continuously under heavy loads (e.g. the application of high temperature/current/voltage and the significant change in temperature, etc.) may cause this product to decrease in the reliability significantly even if the operating conditions (i.e. operating temperature/current/voltage, etc.) are within the absolute maximum ratings. Please design the appropriate reliability upon reviewing the Toshiba Semiconductor Reliability Handbook ("Handling Precautions"/"Derating Concept and Methods") and individual reliability data (i.e. reliability test report and estimated failure rate, etc).

Thermal Characteristics

Characteristics	Symbol	Max	Unit
Thermal resistance, channel to case	$R_{th\ (ch-c)}$	3.57	°C / W
Thermal resistance, channel to ambient	$R_{th\ (ch-a)}$	62.5	°C / W

Note 1: Ensure that the channel temperature does not exceed 150°C.

Note 2: V_{DD} = 25 V, T_{ch} = 25°C (initial), L = 840 μH, R_G = 25 Ω, I_{AR} = 20 A

Note 3: Repetitive rating: pulse width limited by maximum channel temperature

This transistor is an electrostatic-sensitive device.
Please handle with caution.

Electrical Characteristics (Ta = 25°C)

Characteristics		Symbol	Test Condition	Min	Typ.	Max	Unit
Gate leakage current		I_{GSS}	V_{GS} = ±16 V, V_{DS} = 0 V	—	—	±10	μA
Drain cut−off current		I_{DSS}	V_{DS} = 100 V, V_{GS} = 0 V	—	—	100	μA
Drain−source breakdown voltage		$V_{(BR)\ DSS}$	I_D = 10 mA, V_{GS} = 0 V	100	—	—	V
Gate threshold voltage		V_{th}	V_{DS} = 10 V, I_D = 1 mA	0.8	—	2.0	V
Drain−source ON-resistance		$R_{DS\ (ON)}$	V_{GS} = 4 V, I_D = 10 A	—	0.09	0.13	Ω
			V_{GS} = 10 V, I_D = 10 A	—	0.068	0.085	
Forward transfer admittance		$\|Y_{fs}\|$	V_{DS} = 10 V, I_D = 10 A	8	16	—	S
Input capacitance		C_{iss}	V_{DS} = 10 V, V_{GS} = 0 V, f = 1 MHz	—	1100	—	pF
Reverse transfer capacitance		C_{rss}		—	180	—	
Output capacitance		C_{oss}		—	400	—	
Switching time	Rise time	t_r	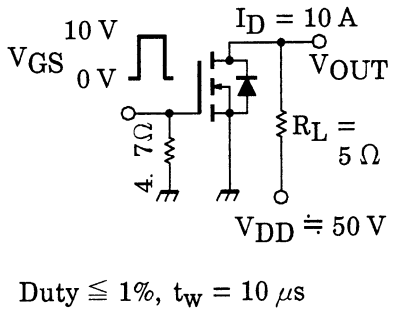	—	20	—	ns
	Turn−on time	t_{on}		—	30	—	
	Fall time	t_f		—	50	—	
	Turn−off time	t_{off}		—	140	—	
Total gate charge (Gate−source plus gate−drain)		Q_g	V_{DD} ≈ 80 V, V_{GS} = 10 V, I_D = 27 A	—	50	—	nC
Gate−source charge		Q_{gs}		—	34	—	
Gate−drain (“miller”) charge		Q_{gd}		—	16	—	

Source−Drain Ratings and Characteristics (Ta = 25°C)

Characteristics	Symbol	Test Condition	Min	Typ.	Max	Unit
Continuous drain reverse current (Note 1)	I_{DR}	—	—	—	20	A
Pulse drain reverse current (Note 1)	I_{DRP}	—	—	—	80	A
Forward voltage (diode)	V_{DSF}	I_{DR} = 20 A, V_{GS} = 0 V	—	—	−1.7	V
Reverse recovery time	t_{rr}	I_{DR} = 20 A, V_{GS} = 0 V, dI_{DR} / dt = 50 A / μs	—	155	—	ns
Reverse recovery charge	Q_{rr}		—	0.31	—	μC

Marking

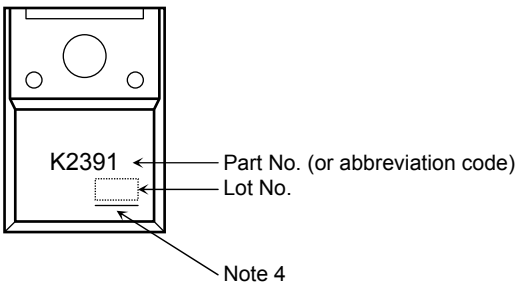

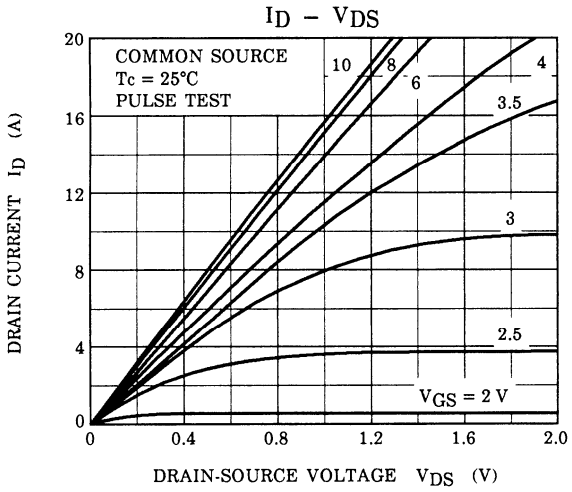
ID – VDS
COMMON SOURCE
Tc = 25°C
PULSE TEST
10
8
6
4
3.5
3
2.5
VGS = 2 V
DRAIN CURRENT ID (A)
DRAIN-SOURCE VOLTAGE VDS (V)

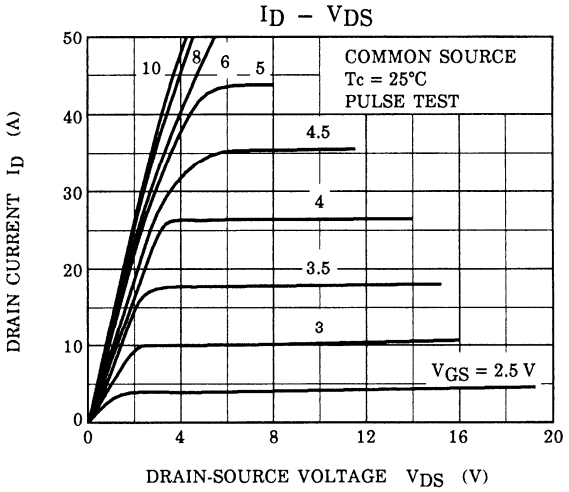
ID – VDS
COMMON SOURCE
Tc = 25°C
PULSE TEST
10
8
6
5
4.5
4
3.5
3
VGS = 2.5 V
DRAIN CURRENT ID (A)
DRAIN-SOURCE VOLTAGE VDS (V)

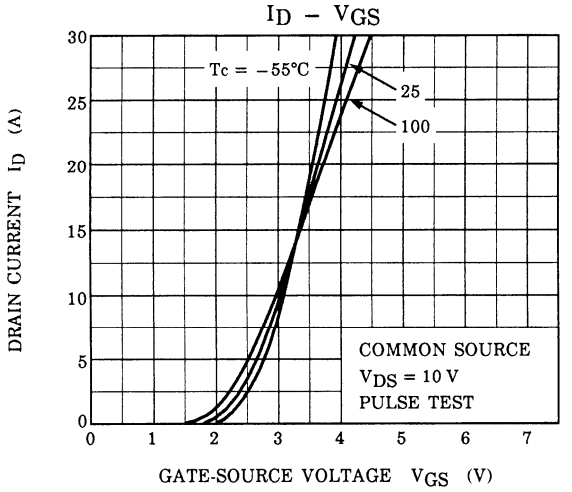
ID – VGS
Tc = –55°C
25
100
COMMON SOURCE
VDS = 10 V
PULSE TEST
DRAIN CURRENT ID (A)
GATE-SOURCE VOLTAGE VGS (V)

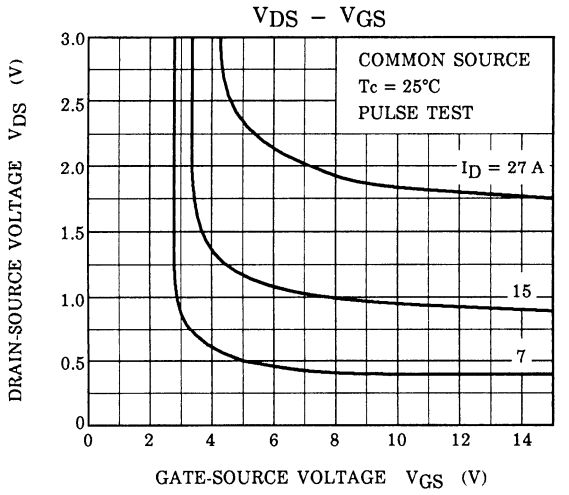
VDS – VGS
COMMON SOURCE
Tc = 25°C
PULSE TEST
ID = 27 A
15
7
DRAIN-SOURCE VOLTAGE VDS (V)
GATE-SOURCE VOLTAGE VGS (V)

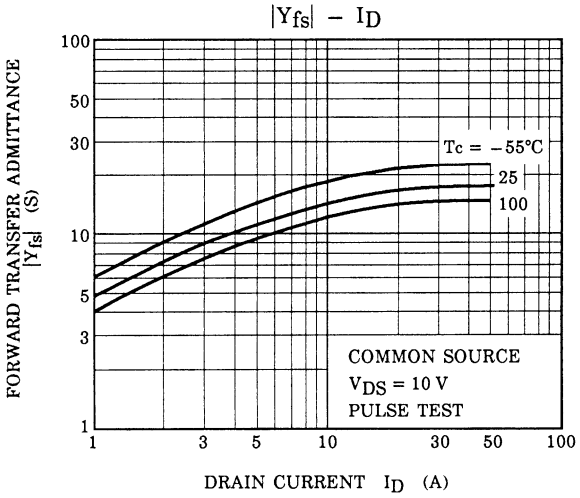
|Yfs| – ID
Tc = –55°C
25
100
COMMON SOURCE
VDS = 10 V
PULSE TEST
FORWARD TRANSFER ADMITTANCE |Yfs| (S)
DRAIN CURRENT ID (A)

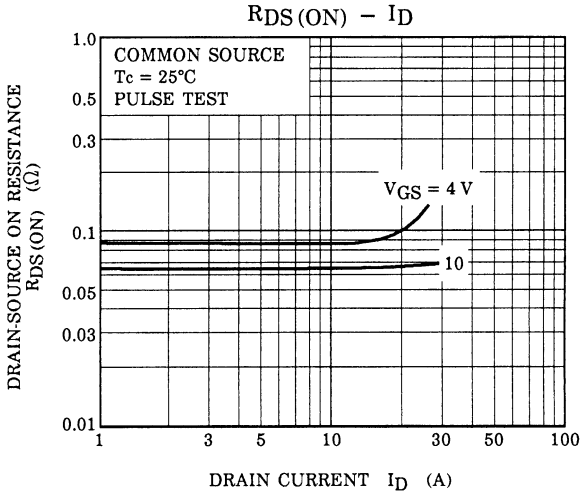
RDS (ON) – ID
COMMON SOURCE
Tc = 25°C
PULSE TEST
VGS = 4 V
10
DRAIN-SOURCE ON RESISTANCE RDS (ON) (Ω)
DRAIN CURRENT ID (A)