2N70K

Power MOSFET

2 Amps, 700 Volts N-CHANNEL POWER MOSFET

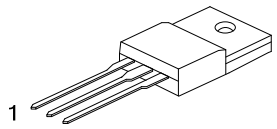

TO-220F2

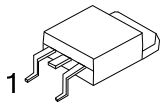

TO-252

■ DESCRIPTION

The **2N70K** is a high voltage MOSFET designed to have better characteristics, such as fast switching time, low gate charge, low on-state resistance and high rugged avalanche characteristics. This power MOSFET is usually used at high speed switching applications in power supplies, PWM motor controls, high efficient DC to DC converters and bridge circuits.

■ FEATURES

* $R_{DS(ON)}$ < 7.5Ω@V_{GS} = 10V
* Fast switching capability
* Avalanche energy specified
* Improved dv/dt capability, high ruggedness

■ SYMBOL

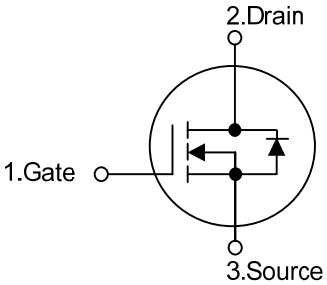

■ ORDERING INFORMATION

Ordering Number		Package	Pin Assignment			Packing
Lead Free	Halogen Free		1	2	3	
2N70KL-TF2-T	2N70KG-TF2-T	TO-220F2	G	D	S	Tube
2N70KL-TN3-R	2N70KG-TN3-R	TO-252	G	D	S	Tape Reel

Note: Pin Assignment: G: Gate D: Drain S: Source

2N70KL-TF2-T (1)Packing Type	(1) T: Tube, R: Tape Reel
(2)Package Type	(2) TF2: TO-220F2, TN3:TO-252
(3)Lead Plating	(3) L: Lead Free, G: Halogen Free

■ MARKING

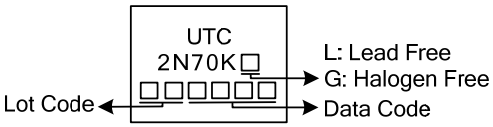

■ ABSOLUTE MAXIMUM RATINGS (T_C = 25°C, unless otherwise specified)

PARAMETER		SYMBOL	RATINGS	UNIT
Drain-Source Voltage		V_{DSS}	700	V
Gate-Source Voltage		V_{GSS}	±30	V
Avalanche Current (Note 2)		I_{AR}	2.0	A
Drain Current	Continuous	I_D	2.0	A
	Pulsed (Note 2)	I_{DM}	8.0	A
Avalanche Energy	Single Pulsed (Note 3)	E_{AS}	20	mJ
	Repetitive (Note 2)	E_{AR}	2.8	mJ
Peak Diode Recovery dv/dt (Note 4)		dv/dt	4.5	V/ns
Power Dissipation	TO-220F2	P_D	40	W
	TO-252		30	
Junction Temperature		T_J	+150	°C
Operating Temperature		T_{OPR}	-55 ~ +150	°C
Storage Temperature		T_{STG}	-55 ~ +150	°C

Notes: 1. Absolute maximum ratings are those values beyond which the device could be permanently damaged. Absolute maximum ratings are stress ratings only and functional device operation is not implied.
2. Repetitive Rating : Pulse width limited by T_J.
3. L=10mH, I_{AS}=2.0A, V_{DD}=50V, R_G=25 Ω, Starting T_J = 25°C
4. I_{SD}≤2.0A, di/dt≤200A/μs, V_{DD}≤ BV_{DSS}, Starting T_J = 25°C

■ THERMAL DATA

PARAMETER		SYMBOL	RATINGS	UNIT
Junction to Ambient	TO-220F2	θ_{JA}	62.5	°C/W
	TO-252		110	
Junction to Case	TO-220F2	θ_{JC}	3.13	°C/W
	TO-252		4.24	

■ ELECTRICAL CHARACTERISTICS (T_J =25°C, unless otherwise specified)

PARAMETER		SYMBOL	TEST CONDITIONS	MIN	TYP	MAX	UNIT
OFF CHARACTERISTICS							
Drain-Source Breakdown Voltage		BV_{DSS}	V_{GS} = 0V, I_D = 250μA	700			V
Drain-Source Leakage Current		I_{DSS}	V_{DS} = 700V, V_{GS} = 0V			10	μA
Gate-Source Leakage Current	Forward	I_{GSS}	V_{GS} = 30V, V_{DS} = 0V			100	nA
	Reverse		V_{GS} = -30V, V_{DS} = 0V			-100	nA
Breakdown Voltage Temperature Coefficient		$\triangle BV_{DSS}/\triangle T_J$	I_D = 250 μA, Referenced to 25°C		0.4		V/°C
ON CHARACTERISTICS							
Gate Threshold Voltage		$V_{GS(TH)}$	V_{DS} = V_{GS}, I_D = 250μA	2.0		4.0	V
Static Drain-Source On-State Resistance		$R_{DS(ON)}$	V_{GS} = 10V, I_D =1A		6.8	7.5	Ω
DYNAMIC CHARACTERISTICS							
Input Capacitance		C_{ISS}	V_{DS} =25V, V_{GS} =0V, f =1MHz		270	350	pF
Output Capacitance		C_{OSS}			38	50	pF
Reverse Transfer Capacitance		C_{RSS}			5	7	pF
SWITCHING CHARACTERISTICS							
Turn-On Delay Time		$t_{D\ (ON)}$	V_{DD} =30V, I_D =0.5A, R_G=25Ω (Note 1, 2)		28	50	ns
Turn-On Rise Time		t_R			40	45	ns
Turn-Off Delay Time		$t_{D(OFF)}$			50	60	ns
Turn-Off Fall Time		t_F			25	30	ns
Total Gate Charge		Q_G	V_{DS}=50V, V_{GS}=10V, I_D=1.3A I_G=100μA (Note 1, 2)		19	30	nC
Gate-Source Charge		Q_{GS}			7		nC
Gate-Drain Charge		Q_{GD}			2.1		nC
DRAIN-SOURCE DIODE CHARACTERISTICS							
Drain-Source Diode Forward Voltage		V_{SD}	V_{GS} = 0 V, I_{SD} = 2.0 A			1.4	V
Continuous Drain-Source Current		I_{SD}				2.0	A
Pulsed Drain-Source Current		I_{SM}				8.0	A

Notes: 1. Pulse Test: Pulse width ≤ 300μs, Duty cycle≤2%
2. Essentially independent of operating temperature

■ TEST CIRCUITS AND WAVEFORMS

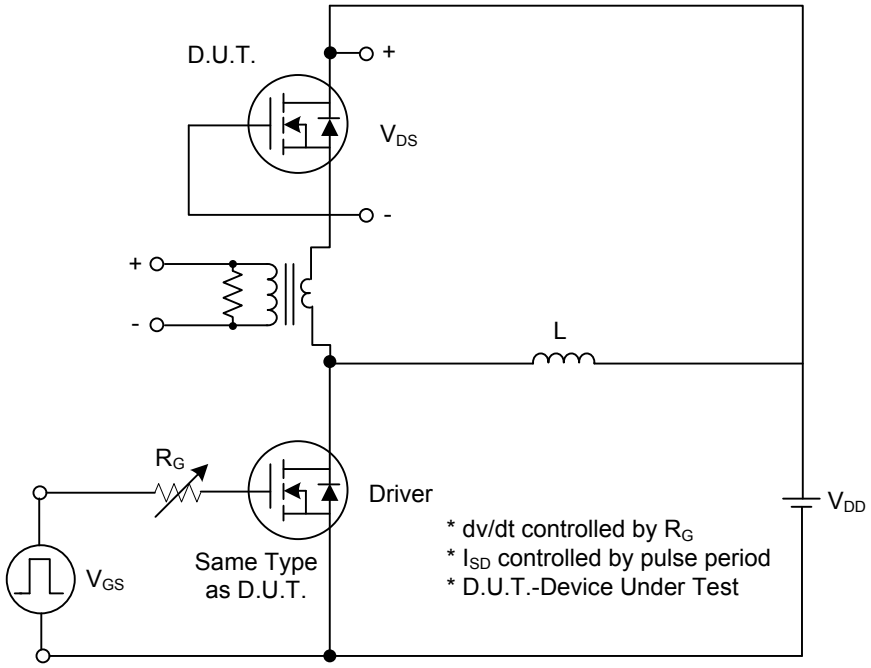

Fig. 1A Peak Diode Recovery dv/dt Test Circuit

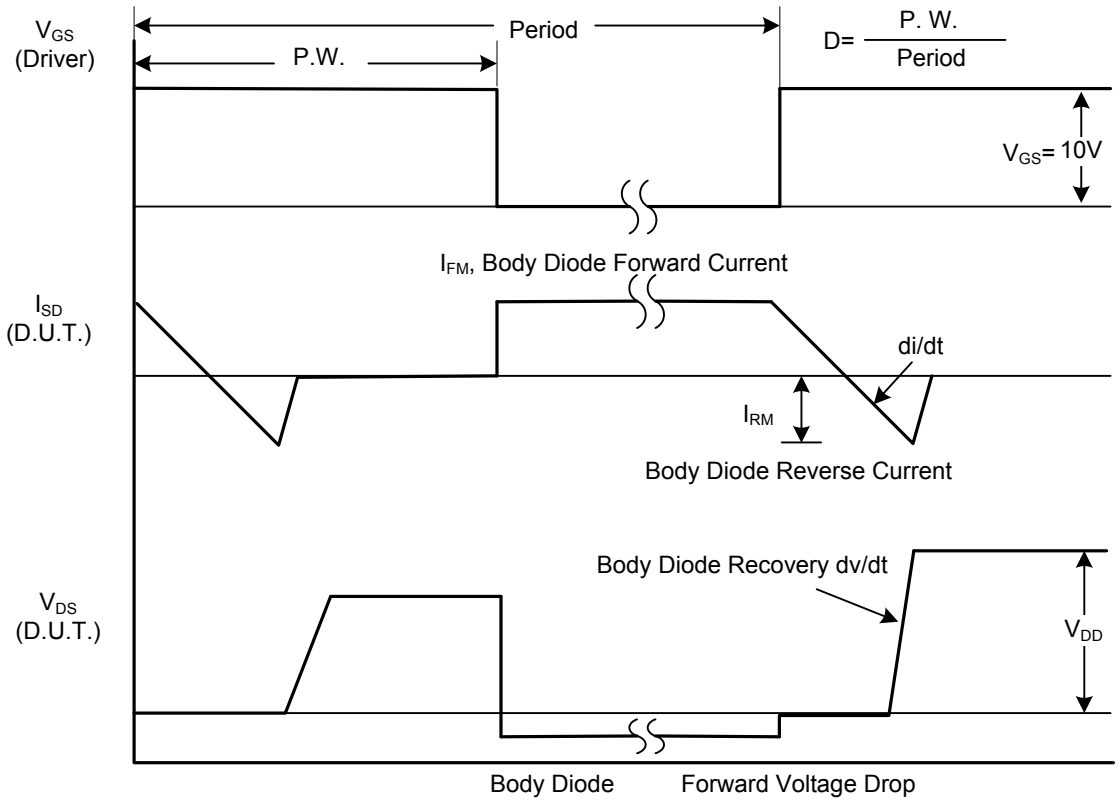

Fig. 1B Peak Diode Recovery dv/dt Waveforms

■ TEST CIRCUITS AND WAVEFORMS (Cont.)

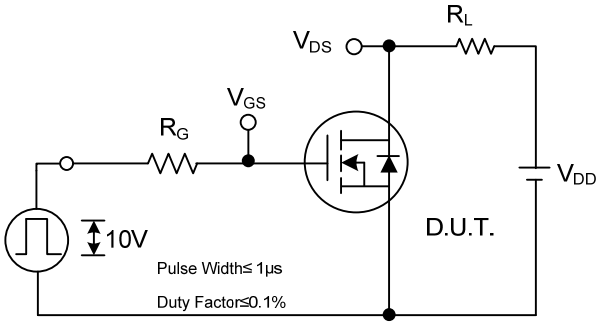

Fig. 2A Switching Test Circuit

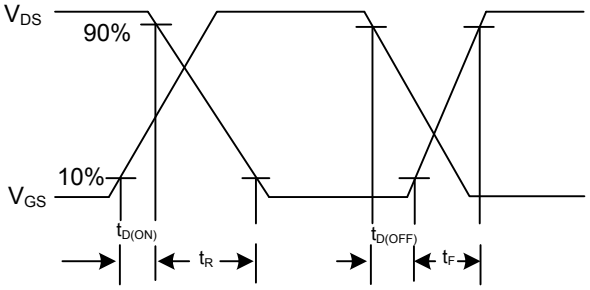

Fig. 2B Switching Waveforms

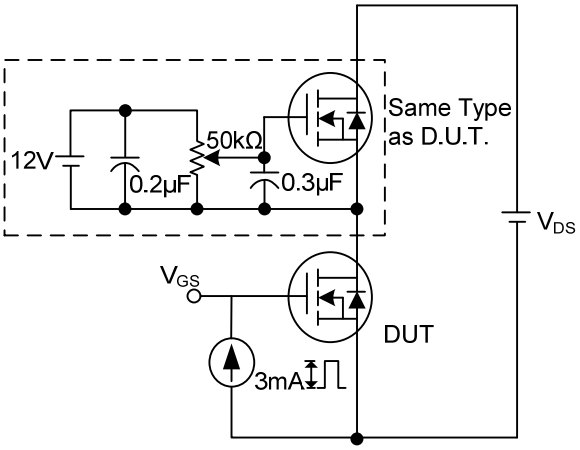

Fig. 3A Gate Charge Test Circuit

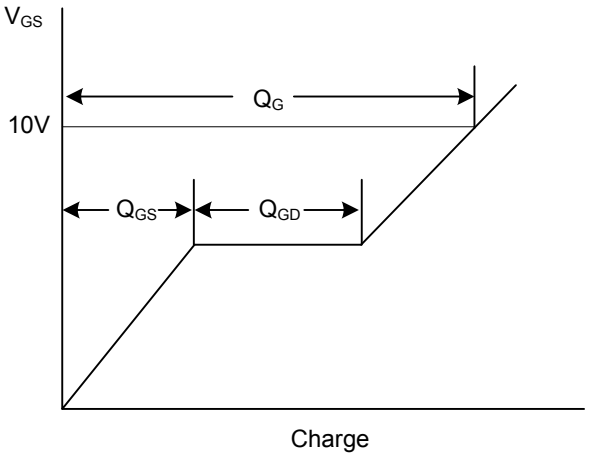

Fig. 3B Gate Charge Waveform

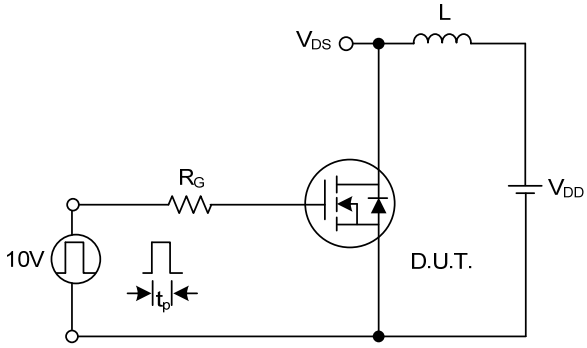

Fig. 4A Unclamped Inductive Switching Test Circuit

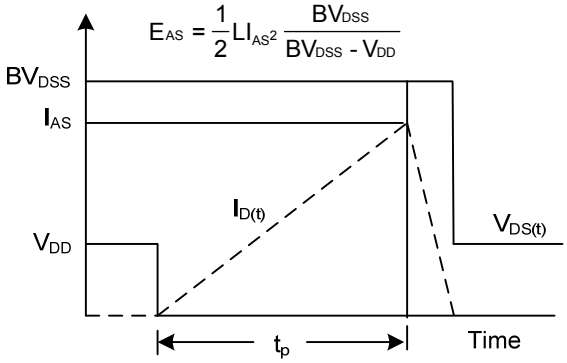

Fig. 4B Unclamped Inductive Switching Waveforms

■ TYPICAL CHARACTERISTICS