TXN/TYN 054 → 1004

THYRISTORS

- GLASS PASSIVATED CHIP
- POSSIBILITY OF MOUNTING ON PRINTED CIRCUIT
- AVAILABLE IN NON-INSULATED VERSION –> TYN SERIES OR IN INSULATED VERSION –> TXN SERIES (INSULATING VOLTAGE 2500 V_{RMS})
- UL RECOGNIZED FOR TXN SERIES (E81734)

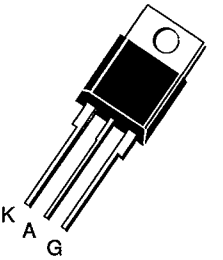

TO 220 AB
(Plastic)

DESCRIPTION

SCR's designed for motor control, heating controls, power supplies...

ABSOLUTE RATINGS (limiting values)

Symbol	Parameter		Value	Unit
$I_{T(RMS)}$	RMS on-state Current (1)	T_c = 90 °C	4	A
$I_{T(AV)}$	Mean on-state Current (1)	T_c = 90 °C	2.5	A
I_{TSM}	Non Repetitive Surge Peak on-state Current (T_j initial = 25 °C) (2)	t = 8.3 ms	73	A
		t = 10 ms	70	
I^2t	I^2t Value for Fusing	t = 10 ms	24.5	A^2s
di/dt	Critical Rate of Rise of on-state Current (3)		50	A/µs
T_{stg} T_j	Storage and Operating Junction Temperature Range		– 40 to 110 – 40 to 110	°C °C

Symbol	Parameter	TXN/TYN							Unit
		054	104	204	404	604	804	1004	
V_{DRM} V_{RRM}	Repetitive Peak off-state Voltage (4)	50	100	200	400	600	800	1000	V

(1) Single phase circuit, 180° conduction angle.
(2) Half sine wave.
(3) I_G = 150 mA di_G/dt = 1 A/µs.
(4) T_j = 110 °C.

THERMAL RESISTANCES

Symbol	Parameter	Value	Unit
$R_{th\ (j-c)}$	Junction-case for D.C.	5	°C/W
$R_{th\ (j-a)}$	Junction-ambient	60	°C/W

GATE CHARACTERISTICS (maximum values)

P_{GM} = 20 W (t_p = 20 µs) I_{FGM} = 2 A (t_p = 20 µs) V_{RGM} = 5 V

$P_{G(AV)}$ = 0.5 W V_{FGM} = 15 V (t_p = 20 µs)

ELECTRICAL CHARACTERISTICS

Symbol	Test Conditions			Min.	Typ.	Max.	Unit
I_{GT}	T_j = 25 °C Pulse Duration > 20 µs	V_D = 12 V	R_L = 33 Ω			15	mA
V_{GT}	T_j = 25 °C Pulse Duration > 20 µs	V_D = 12 V	R_L = 33 Ω			1.5	V
V_{GD}	T_j = 110 °C	V_D = V_{DRM}	R_L = 3.3 kΩ	0.2			V
I_H	T_j = 25 °C	I_T = 100 mA	Gate Open			30	mA
I_L	T_j = 25 °C Pulse Duration > 20 µs	V_D = 12 V	I_G = 30 mA		50		mA
V_{TM}	T_j = 25 °C	I_{TM} = 8 A	t_p = 10 ms			1.8	V
I_{DRM}	V_{DRM} Specified		T_j = 25 °C			0.01	mA
			T_j = 110 °C			1	
I_{RRM}	V_{RRM} Specified		T_j = 25 °C			0.01	mA
			T_j = 110 °C			1	
t_{gt}	T_j = 25 °C I_G = 40 mA	V_D = V_{DRM} di_G/dt = 0.45 A/µs	I_T = 8 A		2		µs
t_q	T_j = 110 °C V_D = 67 % V_{DRM} Gate Open	I_T = 8 A di/dt = 30 A/µs	V_R = 25 V dv/dt = 50 V/µs		70		µs
dv/dt*	T_j = 110 °C Linear Slope up to V_D = 67 % V_{DRM}	Gate Open		200			V/µs

* For higher guaranteed values, please consult us.

PACKAGE MECHANICAL DATA : TO 220 AB Plastic

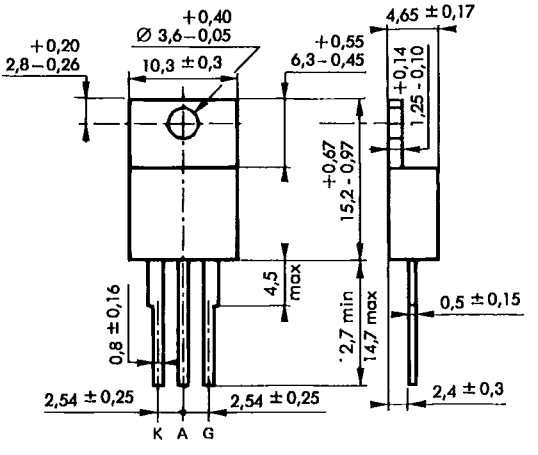

Cooling method : by conduction (method C)
Marking : type number
Weight : 2 g