BTA20 BW/CW
BTB20 BW/CW

SNUBBERLESS TRIACS

FEATURES

- HIGH COMMUTATION : (dI/dt)c > 18A/ms without snubber
- HIGH SURGE CURRENT : I_{TSM} = 200A
- V_{DRM} UP TO 800V
- BTA Family :
  INSULATING VOLTAGE = 2500$V_{(RMS)}$
  (UL RECOGNIZED : E81734)

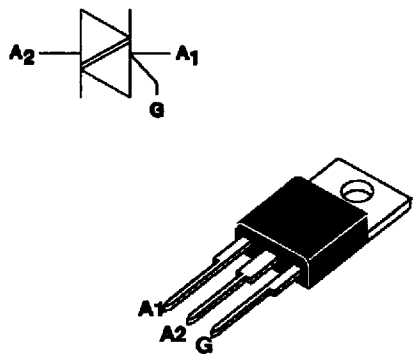

TO220AB
(Plastic)

DESCRIPTION

The BTA/BTB20 BW/CW triac family are high performance glass passivated chips technology.
The SNUBBERLESS™ concept offer suppression of RC network and it is suitable for application such as phase control and static switching on inductive or resistive load.

ABSOLUTE RATINGS (limiting values)

Symbol	Parameter			Value	Unit
$I_{T(RMS)}$	RMS on-state current (360° conduction angle)	BTA	Tc = 70 °C	20	A
		BTB	Tc = 90 °C		
I_{TSM}	Non repetitive surge peak on-state current (Tj initial = 25°C)		tp = 8.3 ms	210	A
			tp = 10 ms	200	
I^2t	I^2t value		tp = 10 ms	200	A^2s
dI/dt	Critical rate of rise of on-state current Gate supply : I_G = 500mA di_G/dt = 1A/µs		Repetitive F = 50 Hz	20	A/µs
			Non Repetitive	100	
Tstg Tj	Storage and operating junction temperature range			- 40 to + 150 - 40 to + 125	°C °C
Tl	Maximum lead temperature for soldering during 10 s at 4.5 mm from case			260	°C

Symbol	Parameter	BTA / BTB20-... BW/CW				Unit
		400	600	700	800	
V_{DRM} V_{RRM}	Repetitive peak off-state voltage Tj = 125 °C	400	600	700	800	V

THERMAL RESISTANCES

Symbol	Parameter		Value	Unit
Rth (j-a)	Junction to ambient		60	°C/W
Rth (j-c) DC	Junction to case for DC	BTA	2.8	°C/W
		BTB	1.7	
Rth (j-c) AC	Junction to case for 360° conduction angle (F= 50 Hz)	BTA	2.1	°C/W
		BTB	1.3	

GATE CHARACTERISTICS (maximum values)

$P_{G\ (AV)}$ = 1W P_{GM} = 10W (tp = 20 µs) I_{GM} = 4A (tp = 20 µs) V_{GM} = 16V (tp = 20 µs).

ELECTRICAL CHARACTERISTICS

Symbol	Test Conditions		Quadrant		Suffix BW	Suffix CW	Unit
I_{GT}	V_D=12V (DC) R_L=33Ω	Tj=25°C	I-II-III	MIN	2	1	mA
				MAX	50	35	
V_{GT}	V_D=12V (DC) R_L=33Ω	Tj=25°C	I-II-III	MAX	1.5		V
V_{GD}	V_D=V_{DRM} R_L=3.3kΩ	Tj=125°C	I-II-III	MIN	0.2		V
tgt	V_D=V_{DRM} I_G = 500mA dI_G/dt = 3A/µs	Tj=25°C	I-II-III	TYP	2		µs
I_L	I_G=1.2 I_{GT}	Tj=25°C	I-III	TYP	50	-	mA
			II	TYP	90	-	
			I-II-III	MAX	-	80	
I_H *	I_T= 500mA gate open	Tj=25°C		MAX	75	50	mA
V_{TM} *	I_{TM}= 28A tp= 380µs	Tj=25°C		MAX	1.70		V
I_{DRM} I_{RRM}	V_{DRM} Rated V_{RRM} Rated	Tj=25°C		MAX	0.01		mA
		Tj=125°C		MAX	3		
dV/dt *	Linear slope up to V_D=67%V_{DRM} gate open	Tj=125°C		MIN	500	250	V/µs
				TYP	750	500	
(dI/dt)c *	Without snubber	Tj=125°C		MIN	18	11	A/ms
				TYP	36	22	

* For either polarity of electrode A_2 voltage with reference to electrode A_1.

ORDERING INFORMATION

Package	$I_{T(RMS)}$	V_{DRM} / V_{RRM}	Sensitivity Specification	
	A	V	BW	CW
BTA (Insulated)	20	400	X	X
		600	X	X
		700	X	X
		800	X	X
BTB (Uninsulated)		400	X	X
		600	X	X
		700	X	X
		800	X	X

Fig.1 : Maximum RMS power dissipation versus RMS on-state current (F=50Hz).
(Curves are cut off by (dI/dt)c limitation)

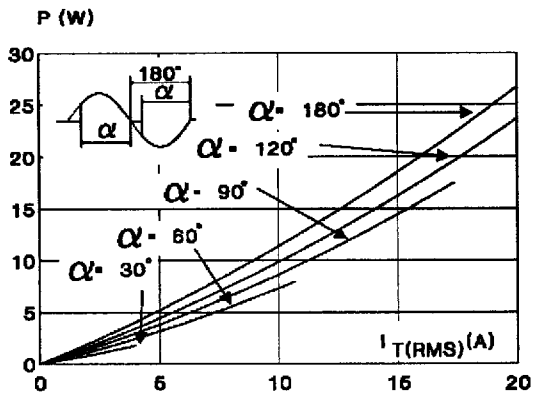

Fig.2 : Correlation between maximum RMS power dissipation and maximum allowable temperatures (T_{amb} and T_{case}) for different thermal resistances heatsink + contact (BTA).

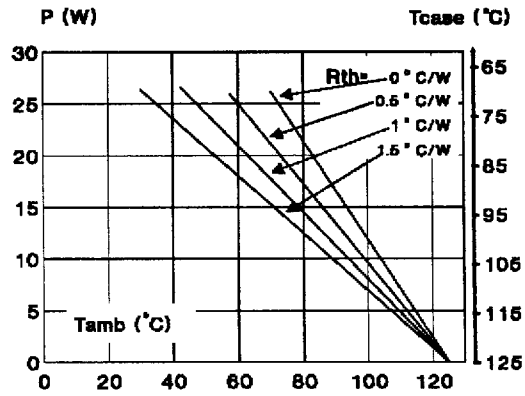

Fig.3 : Correlation between maximum RMS power dissipation and maximum allowable temperatures (T_{amb} and T_{case}) for different thermal resistances heatsink + contact (BTB).

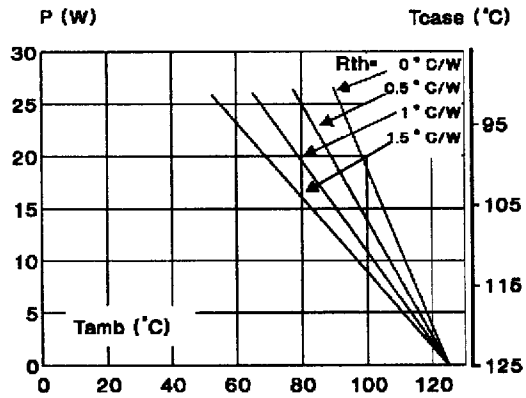

Fig.4 : RMS on-state current versus case temperature.