TA79005S, TA79006S, TA79007S, TA79008S, TA79009S, TA79010S TA79012S, TA79015S, TA79018S, TA79020S, TA79024S

1A THREE TERMINAL NEGATIVE VOLTAGE REGULATORS

– 5V, – 6V, – 7V, – 8V, – 9V, – 10V, – 12V, – 15V, – 18V, – 20V, – 24V

FEATURES

- Suitable for CMOS, TTL, and the other Digital IC Power Supply
- Internal Thermal Overload Protecting
- Internal Short Circuit Current Limiting
- Output Current in Excess of 1.0A
- Metal Fin (Tab) is fully covered with Mold Resin. (TO-220 NIS package)

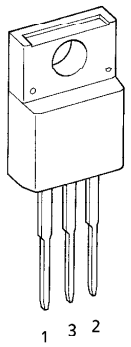

HSIP3-P-2.54A

Weight : 1.7g (Typ.)

EQUIVALENT CIRCUIT

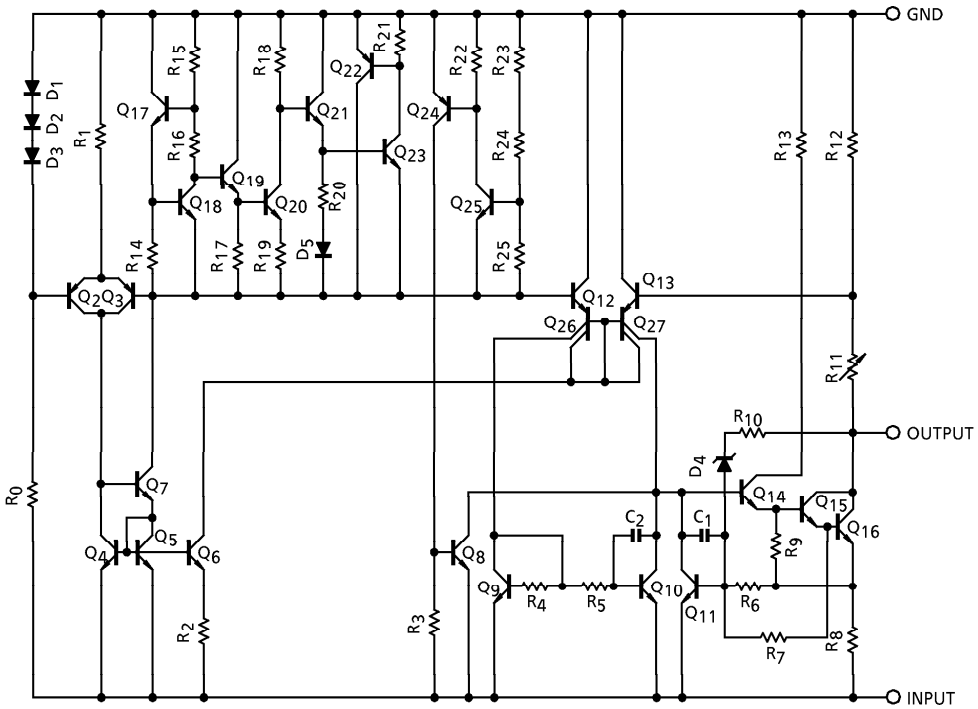

MAXIMUM RATINGS (Ta = 25°C)

CHARACTERISTIC		SYMBOL	RATING	UNIT
Input Voltage	TA79005S	V_{IN}	− 35	V
	TA79006S			
	TA79007S			
	TA79008S			
	TA79009S			
	TA79010S			
	TA79012S			
	TA79015S			
	TA79018S		− 40	
	TA79020S			
	TA79024S			
Power Dissipation	(Ta = 25°C)	P_D	2	W
	(Tc = 25°C)		20	
Operating Temperature		T_{opr}	− 30～75	°C
Storage Temperature		T_{stg}	− 55～150	°C
Operating Junction Temperature		T_j	− 30～150	°C
Thermal Resistance		$R_{th\ (j\text{-}c)}$	6.25	°C / W
		$R_{th\ (j\text{-}a)}$	62.5	

TA79005S

ELECTRICAL CHARACTERISTICS

(Unless otherwise specified, $V_{IN} = -10V$, $I_{OUT} = 500mA$, $0°C \leqq T_j \leqq 125°C$, $C_{IN} = 1.0\mu F$, $C_{OUT} = 1.0\mu F$)

CHARACTERISTIC		SYMBOL	TEST CIR-CUIT	TEST CONDITION		MIN.	TYP.	MAX.	UNIT
Output Voltage		V_{OUT}	1	$T_j = 25°C$		-5.2	-5.0	-4.8	V
Line Regulation		Reg.Line	1	$T_j = 25°C$	$-12V \leqq V_{IN} \leqq -8V$	—	7	50	mV
					$-25V \leqq V_{IN} \leqq -7V$	—	35	100	
Load Regulation		Reg.Load	1	$T_j = 25°C$	$5mA \leqq I_{OUT} \leqq 1.5A$	—	11	100	mV
					$250mA \leqq I_{OUT} \leqq 750mA$	—	4	50	
Output Voltage		V_{OUT}	1	$T_j = 25°C$	$-20V \leqq V_{IN} \leqq -7V$ $5mA \leqq I_{OUT} \leqq 1.0A$	-5.25	—	-4.75	V
Quiescent Current		I_B	1	$T_j = 25°C$		—	4.3	8.0	mA
Quiescent Current Change	Line	ΔI_{BI}	1	$-25V \leqq V_{IN} \leqq -7V$		—	—	1.3	mA
	Load	ΔI_{BO}	1	$5mA \leqq I_{OUT} \leqq 1.0A$		—	—	0.5	
Output Noise Voltage		V_{NO}	2	$Ta = 25°C$, $10Hz \leqq f \leqq 100kHz$		—	40	—	μV_{rms}
Ripple Rejection		R.R.	3	$f = 120Hz$, $I_{OUT} = 20mA$		63	70	—	dB
Short Circuit Current Limit		I_{SC}	1	$T_j = 25°C$		—	1.9	—	A
Average Temperature Coefficient Of Output Voltage		T_{CVO}	1	$I_{OUT} = 5.0mA$		—	0.6	—	mV / °C
Dropout Voltage		V_D	1	$T_j = 25°C$, $I_{OUT} = 1.0A$		—	2.0	—	V

TA79006S

ELECTRICAL CHARACTERISTICS

(Unless otherwise specified, $V_{IN} = -11V$, $I_{OUT} = 500mA$, $0°C \leqq T_j \leqq 125°C$, $C_{IN} = 1.0\mu F$, $C_{OUT} = 1.0\mu F$)

CHARACTERISTIC		SYMBOL	TEST CIR-CUIT	TEST CONDITION		MIN.	TYP.	MAX.	UNIT
Output Voltage		V_{OUT}	1	$T_j = 25°C$		−6.25	−6.0	−5.75	V
Line Regulation		Reg.Line	1	$T_j = 25°C$	$-13V \leqq V_{IN} \leqq -9V$	—	9	60	mV
					$-25V \leqq V_{IN} \leqq -8V$	—	43	120	
Load Regulation		Reg.Load	1	$T_j = 25°C$	$5mA \leqq I_{OUT} \leqq 1.5A$	—	13	120	mV
					$250mA \leqq I_{OUT} \leqq 750mA$	—	5	60	
Output Voltage		V_{OUT}	1	$T_j = 25°C$	$-21V \leqq V_{IN} \leqq -8V$ $5mA \leqq I_{OUT} \leqq 1.0A$	−6.3	—	−5.7	V
Quiescent Current		I_B	1	$T_j = 25°C$		—	4.3	8.0	mA
Quiescent Current Change	Line	ΔI_{BI}	1	$-25V \leqq V_{IN} \leqq -8V$		—	—	1.3	mA
	Load	ΔI_{BO}	1	$5mA \leqq I_{OUT} \leqq 1.0A$		—	—	0.5	
Output Noise Voltage		V_{NO}	2	$Ta = 25°C$, $10Hz \leqq f \leqq 100kHz$		—	45	—	μV_{rms}
Ripple Rejection		R.R.	3	$f = 120Hz$, $I_{OUT} = 20mA$		61	68	—	dB
Short Circuit Current Limit		I_{SC}	1	$T_j = 25°C$		—	1.9	—	A
Average Temperature Coefficient Of Output Voltage		T_{CVO}	1	$I_{OUT} = 5.0mA$		—	0.7	—	mV / °C
Dropout Voltage		V_D	1	$T_j = 25°C$, $I_{OUT} = 1.0A$		—	2.0	—	V

TA79007S

ELECTRICAL CHARACTERISTICS

(Unless otherwise specified, $V_{IN} = -12V$, $I_{OUT} = 500mA$, $0°C \leqq T_j \leqq 125°C$, $C_{IN} = 1.0\mu F$, $C_{OUT} = 1.0\mu F$)

CHARACTERISTIC		SYMBOL	TEST CIR-CUIT	TEST CONDITION		MIN.	TYP.	MAX.	UNIT
Output Voltage		V_{OUT}	1	$T_j = 25°C$		−7.28	−7.0	−6.72	V
Line Regulation		Reg.Line	1	$T_j = 25°C$	$-15V \leqq V_{IN} \leqq -10V$	—	10	70	mV
					$-25V \leqq V_{IN} \leqq -9V$	—	45	140	
Load Regulation		Reg.Load	1	$T_j = 25°C$	$5mA \leqq I_{OUT} \leqq 1.5A$	—	20	140	mV
					$250mA \leqq I_{OUT} \leqq 750mA$	—	7	70	
Output Voltage		V_{OUT}	1	$T_j = 25°C$	$-22V \leqq V_{IN} \leqq -9V$ $5mA \leqq I_{OUT} \leqq 1.0A$	−7.35	—	−6.65	V
Quiescent Current		I_B	1	$T_j = 25°C$		—	4.3	8.0	mA
Quiescent Current Change	Line	ΔI_{BI}	1	$-25V \leqq V_{IN} \leqq -9V$		—	—	1.0	mA
	Load	ΔI_{BO}	1	$5mA \leqq I_{OUT} \leqq 1.0A$		—	—	0.5	
Output Noise Voltage		V_{NO}	2	$Ta = 25°C$, $10Hz \leqq f \leqq 100kHz$		—	49	—	μV_{rms}
Ripple Rejection		R.R.	3	$f = 120Hz$, $I_{OUT} = 20mA$		60	67	—	dB
Short Circuit Current Limit		I_{SC}	1	$T_j = 25°C$		—	1.9	—	A
Average Temperature Coefficient Of Output Voltage		T_{CVO}	1	$I_{OUT} = 5.0mA$		—	0.9	—	mV / °C
Dropout Voltage		V_D	1	$T_j = 25°C$, $I_{OUT} = 1.0$ A		—	2.0	—	V

TA79008S

ELECTRICAL CHARACTERISTICS

(Unless otherwise specified, $V_{IN} = -14V$, $I_{OUT} = 500mA$, $0°C \leqq T_j \leqq 125°C$, $C_{IN} = 1.0\mu F$, $C_{OUT} = 1.0\mu F$)

CHARACTERISTIC		SYMBOL	TEST CIR-CUIT	TEST CONDITION		MIN.	TYP.	MAX.	UNIT
Output Voltage		V_{OUT}	1	$T_j = 25°C$		−8.3	−8.0	−7.7	V
Line Regulation		Reg.Line	1	$T_j = 25°C$	$-17V \leqq V_{IN} \leqq -11V$	—	11	80	mV
					$-25V \leqq V_{IN} \leqq -10.5V$	—	47	160	
Load Regulation		Reg.Load	1	$T_j = 25°C$	$5mA \leqq I_{OUT} \leqq 1.5A$	—	26	160	mV
					$250mA \leqq I_{OUT} \leqq 750mA$	—	9	80	
Output Voltage		V_{OUT}	1	$T_j = 25°C$	$-23V \leqq V_{IN} \leqq -10.5V$ $5mA \leqq I_{OUT} \leqq 1.0A$	−8.4	—	−7.6	V
Quiescent Current		I_B	1	$T_j = 25°C$		—	4.3	8.0	mA
Quiescent Current Change	Line	ΔI_{BI}	1	$-25V \leqq V_{IN} \leqq -10.5V$		—	—	1.0	mA
	Load	ΔI_{BO}	1	$5mA \leqq I_{OUT} \leqq 1.0A$		—	—	0.5	
Output Noise Voltage		V_{NO}	2	$Ta = 25°C$, $10Hz \leqq f \leqq 100kHz$		—	52	—	μV_{rms}
Ripple Rejection		R.R.	3	$f = 120Hz$, $I_{OUT} = 20mA$		59	66	—	dB
Short Circuit Current Limit		I_{SC}	1	$T_j = 25°C$		—	1.9	—	A
Average Temperature Coefficient Of Output Voltage		T_{CVO}	1	$I_{OUT} = 5.0mA$		—	1.0	—	mV / °C
Dropout Voltage		V_D	1	$T_j = 25°C$, $I_{OUT} = 1.0A$		—	2.0	—	V

TA79009S

ELECTRICAL CHARACTERISTICS

(Unless otherwise specified, $V_{IN} = -15V$, $I_{OUT} = 500mA$, $0°C \leqq T_j \leqq 125°C$, $C_{IN} = 1.0\mu F$, $C_{OUT} = 1.0\mu F$)

CHARACTERISTIC		SYMBOL	TEST CIR-CUIT	TEST CONDITION		MIN.	TYP.	MAX.	UNIT
Output Voltage		V_{OUT}	1	$T_j = 25°C$		−9.3	−9.0	−8.7	V
Line Regulation		Reg.Line	1	$T_j = 25°C$	$-19V \leqq V_{IN} \leqq -13V$	—	11	82	mV
					$-26V \leqq V_{IN} \leqq -11.5V$	—	48	162	
Load Regulation		Reg.Load	1	$T_j = 25°C$	$5mA \leqq I_{OUT} \leqq 1.5A$	—	33	162	mV
					$250mA \leqq I_{OUT} \leqq 750mA$	—	11	82	
Output Voltage		V_{OUT}	1	$T_j = 25°C$	$-24V \leqq V_{IN} \leqq -11.5V$ $5mA \leqq I_{OUT} \leqq 1.0A$	−9.4	—	−8.6	V
Quiescent Current		I_B	1	$T_j = 25°C$		—	4.3	8.0	mA
Quiescent Current Change	Line	ΔI_{BI}	1	$-26.5V \leqq V_{IN} \leqq -13V$		—	—	1.0	mA
	Load	ΔI_{BO}	1	$5mA \leqq I_{OUT} \leqq 1.0A$		—	—	0.5	
Output Noise Voltage		V_{NO}	2	$Ta = 25°C$, $10Hz \leqq f \leqq 100kHz$		—	60	—	μV_{rms}
Ripple Rejection		R.R.	3	$f = 120Hz$, $I_{OUT} = 20mA$		57	64	—	dB
Short Circuit Current Limit		I_{SC}	1	$T_j = 25°C$		—	1.9	—	A
Average Temperature Coefficient Of Output Voltage		T_{CVO}	1	$I_{OUT} = 5.0mA$		—	1.1	—	mV / °C
Dropout Voltage		V_D	1	$T_j = 25°C$, $I_{OUT} = 1.0A$		—	2.0	—	V

TA79010S

ELECTRICAL CHARACTERISTICS

(Unless otherwise specified, $V_{IN} = -16V$, $I_{OUT} = 500mA$, $0°C \leqq T_j \leqq 125°C$, $C_{IN} = 1.0\mu F$, $C_{OUT} = 1.0\mu F$)

CHARACTERISTIC		SYMBOL	TEST CIR-CUIT	TEST CONDITION		MIN.	TYP.	MAX.	UNIT
Output Voltage		V_{OUT}	1	$T_j = 25°C$		−10.4	−10	−9.6	V
Line Regulation		Reg.Line	1	$T_j = 25°C$	$-20V \leqq V_{IN} \leqq -14V$	—	12	90	mV
					$-27V \leqq V_{IN} \leqq -12.5V$	—	50	180	
Load Regulation		Reg.Load	1	$T_j = 25°C$	$5mA \leqq I_{OUT} \leqq 1.5A$	—	40	180	mV
					$250mA \leqq I_{OUT} \leqq 750mA$	—	13	90	
Output Voltage		V_{OUT}	1	$T_j = 25°C$	$-25V \leqq V_{IN} \leqq -12.5V$ $5mA \leqq I_{OUT} \leqq 1.0A$	−10.5	—	−9.5	V
Quiescent Current		I_B	1	$T_j = 25°C$		—	4.4	8.0	mA
Quiescent Current Change	Line	ΔI_{BI}	1	$-27.5V \leqq V_{IN} \leqq -14V$		—	—	1.0	mA
	Load	ΔI_{BO}	1	$5mA \leqq I_{OUT} \leqq 1.0A$		—	—	0.5	
Output Noise Voltage		V_{NO}	2	$Ta = 25°C$, $10Hz \leqq f \leqq 100kHz$		—	65	—	μV_{rms}
Ripple Rejection		R.R.	3	$f = 120Hz$, $I_{OUT} = 20mA$		57	63	—	dB
Short Circuit Current Limit		I_{SC}	1	$T_j = 25°C$		—	1.9	—	A
Average Temperature Coefficient Of Output Voltage		T_{CVO}	1	$I_{OUT} = 5.0mA$		—	1.3	—	mV / °C
Dropout Voltage		V_D	1	$T_j = 25°C$, $I_{OUT} = 1.0A$		—	2.0	—	V

TA79012S

ELECTRICAL CHARACTERISTICS

(Unless otherwise specified, $V_{IN} = -19V$, $I_{OUT} = 500mA$, $0°C \leqq T_j \leqq 125°C$, $C_{IN} = 1.0\mu F$, $C_{OUT} = 1.0\mu F$)

CHARACTERISTIC		SYMBOL	TEST CIR-CUIT	TEST CONDITION		MIN.	TYP.	MAX.	UNIT
Output Voltage		V_{OUT}	1	$T_j = 25°C$		-12.5	-12	-11.5	V
Line Regulation		Reg.Line	1	$T_j = 25°C$	$-22V \leqq V_{IN} \leqq -16V$	—	13	120	mV
					$-30V \leqq V_{IN} \leqq -14.5V$	—	55	240	
Load Regulation		Reg.Load	1	$T_j = 25°C$	$5mA \leqq I_{OUT} \leqq 1.5A$	—	46	240	mV
					$250mA \leqq I_{OUT} \leqq 750mA$	—	17	120	
Output Voltage		V_{OUT}	1	$T_j = 25°C$	$-27V \leqq V_{IN} \leqq -14.5V$ $5mA \leqq I_{OUT} \leqq 1.0A$	-12.6	—	-11.4	V
Quiescent Current		I_B	1	$T_j = 25°C$		—	4.4	8.0	mA
Quiescent Current Change	Line	ΔI_{BI}	1	$-30V \leqq V_{IN} \leqq -14.5V$		—	—	1.0	mA
	Load	ΔI_{BO}	1	$5mA \leqq I_{OUT} \leqq 1.0A$		—	—	0.5	
Output Noise Voltage		V_{NO}	2	$Ta = 25°C$, $10Hz \leqq f \leqq 100kHz$		—	75	—	μV_{rms}
Ripple Rejection		R.R.	3	$f = 120Hz$, $I_{OUT} = 20mA$		54	61	—	dB
Short Circuit Current Limit		I_{SC}	1	$T_j = 25°C$		—	1.9	—	A
Average Temperature Coefficient Of Output Voltage		T_{CVO}	1	$I_{OUT} = 5.0mA$		—	1.6	—	mV / °C
Dropout Voltage		V_D	1	$T_j = 25°C$, $I_{OUT} = 1.0A$		—	2.0	—	V

TA79015S

ELECTRICAL CHARACTERISTICS

(Unless otherwise specified, $V_{IN} = -23V$, $I_{OUT} = 500mA$, $0°C \leqq T_j \leqq 125°C$, $C_{IN} = 1.0\mu F$, $C_{OUT} = 1.0\mu F$)

CHARACTERISTIC		SYMBOL	TEST CIR-CUIT	TEST CONDITION		MIN.	TYP.	MAX.	UNIT
Output Voltage		V_{OUT}	1	$T_j = 25°C$		-15.6	-15	-14.4	V
Line Regulation		Reg.Line	1	$T_j = 25°C$	$-26V \leqq V_{IN} \leqq -20V$	—	14	150	mV
					$-30V \leqq V_{IN} \leqq -17.5V$	—	57	300	
Load Regulation		Reg.Load	1	$T_j = 25°C$	$5mA \leqq I_{OUT} \leqq 1.5A$	—	68	300	mV
					$250mA \leqq I_{OUT} \leqq 750mA$	—	25	150	
Output Voltage		V_{OUT}	1	$T_j = 25°C$	$-30V \leqq V_{IN} \leqq -17.5V$ $5mA \leqq I_{OUT} \leqq 1.0A$	-15.75	—	-14.25	V
Quiescent Current		I_B	1	$T_j = 25°C$		—	4.4	8.0	mA
Quiescent Current Change	Line	ΔI_{BI}	1	$-30V \leqq V_{IN} \leqq -17.5V$		—	—	1.0	mA
	Load	ΔI_{BO}	1	$5mA \leqq I_{OUT} \leqq 1.0A$		—	—	0.5	
Output Noise Voltage		V_{NO}	2	$Ta = 25°C$, $10Hz \leqq f \leqq 100kHz$		—	90	—	μV_{rms}
Ripple Rejection		R.R.	3	$f = 120Hz$, $I_{OUT} = 20mA$		53	60	—	dB
Short Circuit Current Limit		I_{SC}	1	$T_j = 25°C$		—	1.9	—	A
Average Temperature Coefficient Of Output Voltage		T_{CVO}	1	$I_{OUT} = 5.0mA$		—	2.0	—	mV / °C
Dropout Voltage		V_D	1	$T_j = 25°C$, $I_{OUT} = 1.0A$		—	2.0	—	V

TA79018S

ELECTRICAL CHARACTERISTICS

(Unless otherwise specified, $V_{IN} = -27V$, $I_{OUT} = 500mA$, $0°C \leqq T_j \leqq 125°C$, $C_{IN} = 1.0\mu F$, $C_{OUT} = 1.0\mu F$)

CHARACTERISTIC		SYMBOL	TEST CIR-CUIT	TEST CONDITION		MIN.	TYP.	MAX.	UNIT
Output Voltage		V_{OUT}	1	$T_j = 25°C$		-18.7	-18	-17.3	V
Line Regulation		Reg.Line	1	$T_j = 25°C$	$-30V \leqq V_{IN} \leqq -24V$	—	25	180	mV
					$-33V \leqq V_{IN} \leqq -21V$	—	80	360	
Load Regulation		Reg.Load	1	$T_j = 25°C$	$5mA \leqq I_{OUT} \leqq 1.5A$	—	110	360	mV
					$250mA \leqq I_{OUT} \leqq 750mA$	—	55	180	
Output Voltage		V_{OUT}	1	$T_j = 25°C$	$-33V \leqq V_{IN} \leqq -21V$ $5mA \leqq I_{OUT} \leqq 1.0A$	-18.85	—	-17.15	V
Quiescent Current		I_B	1	$T_j = 25°C$		—	4.5	8.0	mA
Quiescent Current Change	Line	ΔI_{BI}	1	$-33V \leqq V_{IN} \leqq -21V$		—	—	1.0	mA
	Load	ΔI_{BO}	1	$5mA \leqq I_{OUT} \leqq 1.0A$		—	—	0.5	
Output Noise Voltage		V_{NO}	2	$Ta = 25°C$, $10Hz \leqq f \leqq 100kHz$		—	110	—	μV_{rms}
Ripple Rejection		R.R.	3	$f = 120Hz$, $I_{OUT} = 20mA$		52	59	—	dB
Short Circuit Current Limit		I_{SC}	1	$T_j = 25°C$		—	1.9	—	A
Average Temperature Coefficient Of Output Voltage		T_{CVO}	1	$I_{OUT} = 5.0mA$		—	2.5	—	mV / °C
Dropout Voltage		V_D	1	$T_j = 25°C$, $I_{OUT} = 1.0A$		—	2.0	—	V

TA79020S

ELECTRICAL CHARACTERISTICS

(Unless otherwise specified, $V_{IN} = -30V$, $I_{OUT} = 500mA$, $0°C \leqq T_j \leqq 125°C$, $C_{IN} = 1.0\mu F$, $C_{OUT} = 1.0\mu F$)

CHARACTERISTIC		SYMBOL	TEST CIR-CUIT	TEST CONDITION		MIN.	TYP.	MAX.	UNIT
Output Voltage		V_{OUT}	1	$T_j = 25°C$		−20.8	−20	−19.2	V
Line Regulation		Reg.Line	1	$T_j = 25°C$	$-32V \leqq V_{IN} \leqq -26V$	—	28	180	mV
					$-35V \leqq V_{IN} \leqq -24V$	—	104	360	
Load Regulation		Reg.Load	1	$T_j = 25°C$	$5mA \leqq I_{OUT} \leqq 1.5A$	—	130	360	mV
					$250mA \leqq I_{OUT} \leqq 750mA$	—	70	180	
Output Voltage		V_{OUT}	1	$T_j = 25°C$	$-35V \leqq V_{IN} \leqq -24V$ $5mA \leqq I_{OUT} \leqq 1.0A$	−21.0	—	−19.0	V
Quiescent Current		I_B	1	$T_j = 25°C$		—	4.6	8.0	mA
Quiescent Current Change	Line	ΔI_{BI}	1	$-36.5V \leqq V_{IN} \leqq -25V$		—	—	1.0	mA
	Load	ΔI_{BO}	1	$5mA \leqq I_{OUT} \leqq 1.0A$		—	—	0.5	
Output Noise Voltage		V_{NO}	2	$Ta = 25°C$, $10Hz \leqq f \leqq 100kHz$		—	140	—	μV_{rms}
Ripple Rejection		R.R.	3	$f = 120Hz$, $I_{OUT} = 20mA$		50	57	—	dB
Short Circuit Current Limit		I_{SC}	1	$T_j = 25°C$		—	1.9	—	A
Average Temperature Coefficient Of Output Voltage		T_{CVO}	1	$I_{OUT} = 5.0mA$		—	3.0	—	mV / °C
Dropout Voltage		V_D	1	$T_j = 25°C$, $I_{OUT} = 1.0A$		—	2.0	—	V

TA79024S

ELECTRICAL CHARACTERISTICS

(Unless otherwise specified, $V_{IN} = -33V$, $I_{OUT} = 500mA$, $0°C \leqq T_j \leqq 125°C$, $C_{IN} = 1.0\mu F$, $C_{OUT} = 1.0\mu F$)

CHARACTERISTIC		SYMBOL	TEST CIR-CUIT	TEST CONDITION		MIN.	TYP.	MAX.	UNIT
Output Voltage		V_{OUT}	1	$T_j = 25°C$		−25.0	−24	−23.0	V
Line Regulation		Reg.Line	1	$T_j = 25°C$	$-36V \leqq V_{IN} \leqq -30V$	—	31	240	mV
					$-38V \leqq V_{IN} \leqq -27V$	—	118	480	
Load Regulation		Reg.Load	1	$T_j = 25°C$	$5mA \leqq I_{OUT} \leqq 1.5A$	—	150	480	mV
					$250mA \leqq I_{OUT} \leqq 750mA$	—	85	240	
Output Voltage		V_{OUT}	1	$T_j = 25°C$	$-38V \leqq V_{IN} \leqq -27V$ $5mA \leqq I_{OUT} \leqq 1.0A$	−25.2	—	−22.8	V
Quiescent Current		I_B	1	$T_j = 25°C$		—	4.6	8.0	mA
Quiescent Current Change	Line	ΔI_{BI}	1	$-38V \leq V_{IN} \leq -27V$		—	—	1.0	mA
	Load	ΔI_{BO}	1	$5mA \leqq I_{OUT} \leqq 1.0A$		—	—	0.5	
Output Noise Voltage		V_{NO}	2	$Ta = 25°C$, $10Hz \leqq f \leqq 100kHz$		—	170	—	μV_{rms}
Ripple Rejection		R.R.	3	$f = 120Hz$, $I_{OUT} = 20mA$		49	56	—	dB
Short Circuit Current Limit		I_{SC}	1	$T_j = 25°C$		—	1.9	—	A
Average Temperature Coefficient Of Output Voltage		T_{CVO}	1	$I_{OUT} = 5.0mA$		—	3.5	—	mV / °C
Dropout Voltage		V_D	1	$T_j = 25°C$, $I_{OUT} = 1.0A$		—	2.0	—	V