TA78M05S, TA78M06S, TA78M08S, TA78M09S, TA78M10S TA78M12S, TA78M15S, TA78M18S, TA78M20S, TA78M24S

0.5A THREE TERMINAL POSITIVE VOLTAGE REGULATORS

5V, 6V, 8V, 9V, 10V, 12V, 15V, 18V, 20V, 24V

The TA78M××S series of fixed-voltage monolithic integrated circuit voltage regulators is designed for a wide range of applications. These regulators employ internal current-limiting, thermal-shutdown and safe-area compensation, making them essentially indestructible. One of these regulators can driver up to 0.5A of output current.

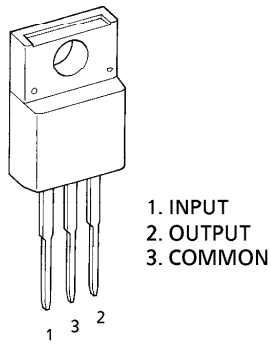

HSIP3-P-2.54A

Weight : 1.7g (Typ.)

FEATURES

- Suitable for CMOS, TTL and the other Digital IC's Power Supply.
- Output Current in Excess of 0.5A
- Internal Thermal Overload Protection
- Internal Short Circuit Current Limiting
- Package in the Plastic Case TO-220NIS

EQUIVALENT CIRCUIT

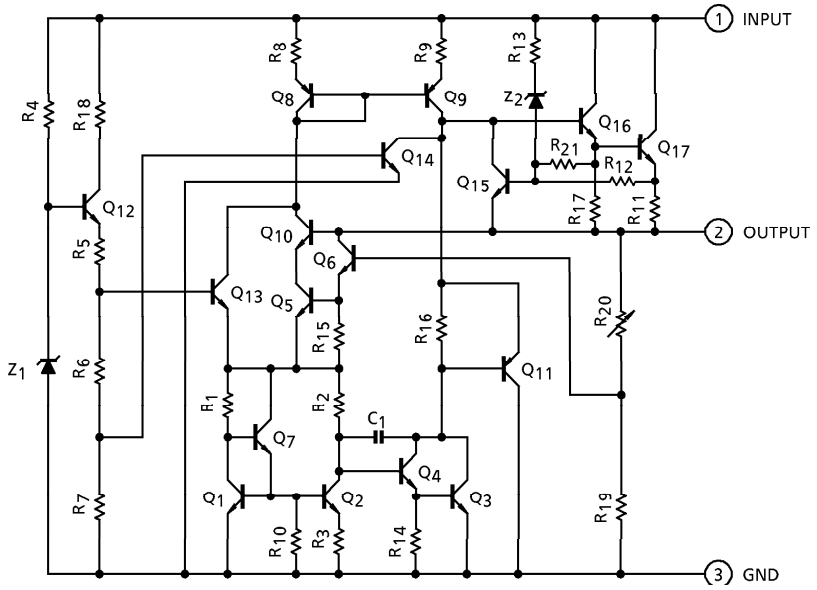

MAXIMUM RATINGS (Ta = 25°C)

CHARACTERISTIC		SYMBOL	RATING	UNIT
Input Voltage	TA78M05S	V_{IN}	35	V
	TA78M06S			
	TA78M08S			
	TA78M09S			
	TA78M10S			
	TA78M12S			
	TA78M15S			
	TA78M18S		40	
	TA78M20S			
	TA78M24S			
Power Dissipation	(Ta = 25°C)	P_D	2	W
	(Tc = 25°C)		20	
Operating Temperature		T_{opr}	− 30～75	°C
Storage Temperature		T_{stg}	− 55～150	°C
Operating Junction Temperature		T_j	− 30～150	°C
Thermal Resistance		$R_{th\ (j\text{-}c)}$	6.25	°C / W
		$R_{th\ (j\text{-}a)}$	62.5	

TA78M05S

ELECTRICAL CHARACTERISTICS

(V_{IN} = 10V, I_{OUT} = 350mA, 0°C ≦ T_j ≦ 125°C, C_{IN} = 0.33μF, C_{OUT} = 0.1μF, unless otherwise noted)

CHARACTERISTIC		SYMBOL	TEST CIR-CUIT	TEST CONDITION		MIN.	TYP.	MAX.	UNIT
Output Voltage		V_{OUT}	1	T_j = 25°C		4.8	5.0	5.2	V
Line Regulation		Reg.line	1	T_j = 25°C	7V ≦ V_{IN} ≦ 25V I_{OUT} = 200mA	—	4	100	mV
					8V ≦ V_{IN} ≦ 25V I_{OUT} = 200mA	—	2	50	
Load Regulation		Reg.load	1	T_j = 25°C	5mA ≦ I_{OUT} ≦ 500mA	—	25	100	mV
					5mA ≦ I_{OUT} ≦ 200mA	—	10	50	
Output Voltage		V_{OUT}	1	T_j = 25°C	7V ≦ V_{IN} ≦ 20V 5mA ≦ I_{OUT} ≦ 350mA	4.75	—	5.25	V
Quiescent Current		I_B	1	T_j = 25°C		—	4.5	8.0	mA
Quiescent Current Change	Line	ΔI_{BI}	1	8.5V ≦ V_{IN} ≦ 25.5V, I_{OUT} = 200mA		—	—	0.8	mA
	Load	ΔI_{BO}	1	5mA ≦ I_{OUT} ≦ 350mA		—	—	0.5	
Output Noise Voltage		V_{NO}	2	Ta = 25°C, 10Hz ≦ f ≦ 100kHz		—	50	200	μV_{rms}
Ripple Rejection		R.R.	3	f = 120Hz, I_{OUT} = 100mA 8V ≦ V_{IN} ≦ 18V, T_j = 25°C		62	69	—	dB
Short Circuit Current Limit		I_{SC}	1	T_j = 25°C		—	960	—	mA
Dropout Voltage		V_D	1	Ta = 25°C		—	1.7	—	V
Average Temperature Coefficient Of Output Voltage		T_{CVO}	1	I_{OUT} = 5mA		—	−0.6	—	mV / °C

TA78M06S

ELECTRICAL CHARACTERISTICS

(V_{IN} = 11V, I_{OUT} = 350mA, 0°C ≦ T_j ≦ 125°C, C_{IN} = 0.33μF, C_{OUT} = 0.1μF, unless otherwise noted)

CHARACTERISTIC		SYMBOL	TEST CIR-CUIT	TEST CONDITION		MIN.	TYP.	MAX.	UNIT
Output Voltage		V_{OUT}	1	T_j = 25°C		5.75	6.0	6.25	V
Line Regulation		Reg.line	1	T_j = 25°C	8V ≦ V_{IN} ≦ 25V I_{OUT} = 200mA	—	4	100	mV
					9V ≦ V_{IN} ≦ 25V I_{OUT} = 200mA	—	2	50	
Load Regulation		Reg.load	1	T_j = 25°C	5mA ≦ I_{OUT} ≦ 500mA	—	25	120	mV
					5mA ≦ I_{OUT} ≦ 200mA	—	10	60	
Output Voltage		V_{OUT}	1	T_j = 25°C	8V ≦ V_{IN} ≦ 21V 5mA ≦ I_{OUT} ≦ 350mA	5.7	—	6.3	V
Quiescent Current		I_B	1	T_j = 25°C		—	4.5	8.0	mA
Quiescent Current Change	Line	ΔI_{BI}	1	9.5V ≦ V_{IN} ≦ 25.5V, I_{OUT} = 200mA		—	—	0.8	mA
	Load	ΔI_{BO}	1	5mA ≦ I_{OUT} ≦ 350mA		—	—	0.5	
Output Noise Voltage		V_{NO}	2	Ta = 25°C, 10Hz ≦ f ≦ 100kHz		—	55	220	μV_{rms}
Ripple Rejection		R.R.	3	f = 120Hz, I_{OUT} = 100mA 9V ≦ V_{IN} ≦ 19V, T_j = 25°C		59	66	—	dB
Short Circuit Current Limit		I_{SC}	1	T_j = 25°C		—	960	—	mA
Dropout Voltage		V_D	1	Ta = 25°C		—	1.7	—	V
Average Temperature Coefficient Of Output Voltage		T_{CVO}	1	I_{OUT} = 5mA		—	−0.7	—	mV / °C

TA78M08S

ELECTRICAL CHARACTERISTICS

(V_{IN} = 14V, I_{OUT} = 350mA, 0°C ≦ T_j ≦ 125°C, C_{IN} = 0.33μF, C_{OUT} = 0.1μF, unless otherwise noted)

CHARACTERISTIC		SYMBOL	TEST CIR-CUIT	TEST CONDITION		MIN.	TYP.	MAX.	UNIT
Output Voltage		V_{OUT}	1	T_j = 25°C		7.7	8.0	8.3	V
Line Regulation		Reg.line	1	T_j = 25°C	10.5V ≦ V_{IN} ≦ 25V I_{OUT} = 200mA	—	5	100	mV
					11V ≦ V_{IN} ≦ 25V I_{OUT} = 200mA	—	3	50	
Load Regulation		Reg.load	1	T_j = 25°C	5mA ≦ I_{OUT} ≦ 500mA	—	26	160	mV
					5mA ≦ I_{OUT} ≦ 200mA	—	10	80	
Output Voltage		V_{OUT}	1	T_j = 25°C	10.5V ≦ V_{IN} ≦ 23V 5mA ≦ I_{OUT} ≦ 350mA	7.6	—	8.4	V
Quiescent Current		I_B	1	T_j = 25°C		—	4.6	8.0	mA
Quiescent Current Change	Line	ΔI_{BI}	1	11V ≦ V_{IN} ≦ 25.5V, I_{OUT} = 200mA		—	—	0.8	mA
	Load	ΔI_{BO}	1	5mA ≦ I_{OUT} ≦ 350mA		—	—	0.5	
Output Noise Voltage		V_{NO}	2	Ta = 25°C, 10Hz ≦ f ≦ 100kHz		—	60	250	μV_{rms}
Ripple Rejection		R.R.	3	f = 120Hz, I_{OUT} = 100mA 11.5V ≦ V_{IN} ≦ 21.5V, T_j = 25°C		56	63	—	dB
Short Circuit Current Limit		I_{SC}	1	T_j = 25°C		—	960	—	mA
Dropout Voltage		V_D	1	Ta = 25°C		—	1.7	—	V
Average Temperature Coefficient Of Output Voltage		T_{CVO}	1	I_{OUT} = 5mA		—	− 1.0	—	mV / °C

TA78M09S

ELECTRICAL CHARACTERISTICS

(V_{IN} = 15V, I_{OUT} = 350mA, 0°C ≦ T_j ≦ 125°C, C_{IN} = 0.33μF, C_{OUT} = 0.1μF, unless otherwise noted)

CHARACTERISTIC		SYMBOL	TEST CIR-CUIT	TEST CONDITION		MIN.	TYP.	MAX.	UNIT
Output Voltage		V_{OUT}	1	T_j = 25°C		8.64	9.0	9.36	V
Line Regulation		Reg.line	1	T_j = 25°C	11.5V ≦ V_{IN} ≦ 26V I_{OUT} = 200mA	—	5	100	mV
					13V ≦ V_{IN} ≦ 26V I_{OUT} = 200mA	—	3	50	
Load Regulation		Reg.load	1	T_j = 25°C	5mA ≦ I_{OUT} ≦ 500mA	—	26	180	mV
					5mA ≦ I_{OUT} ≦ 200mA	—	10	90	
Output Voltage		V_{OUT}	1	T_j = 25°C	11.5V ≦ V_{IN} ≦ 24V 5mA ≦ I_{OUT} ≦ 350mA	8.55	—	9.45	V
Quiescent Current		I_B	1	T_j = 25°C		—	4.6	8.0	mA
Quiescent Current Change	Line	ΔI_{BI}	1	12V ≦ V_{IN} ≦ 26.5V, I_{OUT} = 200mA		—	—	0.8	mA
	Load	ΔI_{BO}	1	5mA ≦ I_{OUT} ≦ 350mA		—	—	0.5	
Output Noise Voltage		V_{NO}	2	Ta = 25°C, 10Hz ≦ f ≦ 100kHz		—	60	270	μV_{rms}
Ripple Rejection		R.R.	3	f = 120Hz, I_{OUT} = 100mA 12.5V ≦ V_{IN} ≦ 22.5V, T_j = 25°C		56	63	—	dB
Short Circuit Current Limit		I_{SC}	1	T_j = 25°C		—	960	—	mA
Dropout Voltage		V_D	1	Ta = 25°C		—	1.7	—	V
Average Temperature Coefficient Of Output Voltage		T_{CVO}	1	I_{OUT} = 5mA		—	− 1.1	—	mV / °C

TA78M10S

ELECTRICAL CHARACTERISTICS

(V_{IN} = 16V, I_{OUT} = 350mA, 0°C ≦ T_j ≦ 125°C, C_{IN} = 0.33μF, C_{OUT} = 0.1μF, unless otherwise noted)

CHARACTERISTIC		SYMBOL	TEST CIR-CUIT	TEST CONDITION		MIN.	TYP.	MAX.	UNIT
Output Voltage		V_{OUT}	1	T_j = 25°C		9.6	10.0	10.4	V
Line Regulation		Reg.line	1	T_j = 25°C	12.5V ≦ V_{IN} ≦ 26V I_{OUT} = 200mA	—	6	100	mV
					14V ≦ V_{IN} ≦ 26V I_{OUT} = 200mA	—	3	50	
Load Regulation		Reg.load	1	T_j = 25°C	5mA ≦ I_{OUT} ≦ 500mA	—	26	200	mV
					5mA ≦ I_{OUT} ≦ 200mA	—	10	100	
Output Voltage		V_{OUT}	1	T_j = 25°C	12.5V ≦ V_{IN} ≦ 25V 5mA ≦ I_{OUT} ≦ 350mA	9.5	—	10.5	V
Quiescent Current		I_B	1	T_j = 25°C		—	4.7	8.0	mA
Quiescent Current Change	Line	ΔI_{BI}	1	13V ≦ V_{IN} ≦ 26.5V, I_{OUT} = 200mA		—	—	0.8	mA
	Load	ΔI_{BO}	1	5mA ≦ I_{OUT} ≦ 350mA		—	—	0.5	
Output Noise Voltage		V_{NO}	2	Ta = 25°C, 10Hz ≦ f ≦ 100kHz		—	65	280	μV_{rms}
Ripple Rejection		R.R.	3	f = 120Hz, I_{OUT} = 100mA 13.5V ≦ V_{IN} ≦ 23.5V, T_j = 25°C		55	62	—	dB
Short Circuit Current Limit		I_{SC}	1	T_j = 25°C		—	960	—	mA
Dropout Voltage		V_D	1	Ta = 25°C		—	1.7	—	V
Average Temperature Coefficient Of Output Voltage		T_{CVO}	1	I_{OUT} = 5mA		—	− 1.3	—	mV / °C

TA78M12S

ELECTRICAL CHARACTERISTICS

(V_{IN} = 19V, I_{OUT} = 350mA, 0°C ≦ T_j ≦ 125°C, C_{IN} = 0.33μF, C_{OUT} = 0.1μF, unless otherwise noted)

CHARACTERISTIC		SYMBOL	TEST CIR-CUIT	TEST CONDITION		MIN.	TYP.	MAX.	UNIT
Output Voltage		V_{OUT}	1	T_j = 25°C		11.5	12.0	12.5	V
Line Regulation		Reg.line	1	T_j = 25°C	14.5V ≦ V_{IN} ≦ 30V I_{OUT} = 200mA	—	7	100	mV
					16V ≦ V_{IN} ≦ 30V I_{OUT} = 200mA	—	3	50	
Load Regulation		Reg.load	1	T_j = 25°C	5mA ≦ I_{OUT} ≦ 500mA	—	27	240	mV
					5mA ≦ I_{OUT} ≦ 200mA	—	10	120	
Output Voltage		V_{OUT}	1	T_j = 25°C	14.5V ≦ V_{IN} ≦ 27V 5mA ≦ I_{OUT} ≦ 350mA	11.4	—	12.6	V
Quiescent Current		I_B	1	T_j = 25°C		—	4.8	8.0	mA
Quiescent Current Change	Line	ΔI_{BI}	1	15V ≦ V_{IN} ≦ 30.5V, I_{OUT} = 200mA		—	—	0.8	mA
	Load	ΔI_{BO}	1	5mA ≦ I_{OUT} ≦ 350mA		—	—	0.5	
Output Noise Voltage		V_{NO}	2	Ta = 25°C, 10Hz ≦ f ≦ 100kHz		—	70	300	μV_{rms}
Ripple Rejection		R.R.	3	f = 120Hz, I_{OUT} = 100mA 15V ≦ V_{IN} ≦ 25V, T_j = 25°C		55	62	—	dB
Short Circuit Current Limit		I_{SC}	1	T_j = 25°C		—	960	—	mA
Dropout Voltage		V_D	1	Ta = 25°C		—	1.7	—	V
Average Temperature Coefficient Of Output Voltage		T_{CVO}	1	I_{OUT} = 5mA		—	− 1.6	—	mV / °C

TA78M15S

ELECTRICAL CHARACTERISTICS

(V_{IN} = 23V, I_{OUT} = 350mA, 0°C ≦ T_j ≦ 125°C, C_{IN} = 0.33μF, C_{OUT} = 0.1μF, unless otherwise noted)

CHARACTERISTIC		SYMBOL	TEST CIR-CUIT	TEST CONDITION		MIN.	TYP.	MAX.	UNIT
Output Voltage		V_{OUT}	1	T_j = 25°C		14.4	15.0	15.6	V
Line Regulation		Reg.line	1	T_j = 25°C	17.5V ≦ V_{IN} ≦ 30V I_{OUT} = 200mA	—	8	100	mV
					20V ≦ V_{IN} ≦ 30V I_{OUT} = 200mA	—	4	50	
Load Regulation		Reg.load	1	T_j = 25°C	5mA ≦ I_{OUT} ≦ 500mA	—	27	300	mV
					5mA ≦ I_{OUT} ≦ 200mA	—	10	150	
Output Voltage		V_{OUT}	1	T_j = 25°C	17.5V ≦ V_{IN} ≦ 30V 5mA ≦ I_{OUT} ≦ 350mA	14.25	—	15.75	V
Quiescent Current		I_B	1	T_j = 25°C		—	4.8	8.0	mA
Quiescent Current Change	Line	ΔI_{BI}	1	18V ≦ V_{IN} ≦ 30.5V, I_{OUT} = 200mA		—	—	0.8	mA
	Load	ΔI_{BO}	1	5mA ≦ I_{OUT} ≦ 350mA		—	—	0.5	
Output Noise Voltage		V_{NO}	2	Ta = 25°C, 10Hz ≦ f ≦ 100kHz		—	80	450	μV_{rms}
Ripple Rejection		R.R.	3	f = 120Hz, I_{OUT} = 100mA 18.5V ≦ V_{IN} ≦ 28.5V, T_j = 25°C		54	61	—	dB
Short Circuit Current Limit		I_{SC}	1	T_j = 25°C		—	960	—	mA
Dropout Voltage		V_D	1	Ta = 25°C		—	1.7	—	V
Average Temperature Coefficient Of Output Voltage		T_{CVO}	1	I_{OUT} = 5mA		—	−2.0	—	mV / °C

TA78M18S

ELECTRICAL CHARACTERISTICS

(V_{IN} = 27V, I_{OUT} = 350mA, 0°C ≦ T_j ≦ 125°C, C_{IN} = 0.33μF, C_{OUT} = 0.1μF, unless otherwise noted)

CHARACTERISTIC		SYMBOL	TEST CIR-CUIT	TEST CONDITION		MIN.	TYP.	MAX.	UNIT
Output Voltage		V_{OUT}	1	T_j = 25°C		17.3	18.0	18.7	V
Line Regulation		Reg.line	1	T_j = 25°C	21V ≦ V_{IN} ≦ 33V I_{OUT} = 200mA	—	9	100	mV
					24V ≦ V_{IN} ≦ 33V I_{OUT} = 200mA	—	5	50	
Load Regulation		Reg.load	1	T_j = 25°C	5mA ≦ I_{OUT} ≦ 500mA	—	28	360	mV
					5mA ≦ I_{OUT} ≦ 200mA	—	10	180	
Output Voltage		V_{OUT}	1	T_j = 25°C	21V ≦ V_{IN} ≦ 33V 5mA ≦ I_{OUT} ≦ 350mA	17.1	—	18.9	V
Quiescent Current		I_B	1	T_j = 25°C		—	4.8	8.0	mA
Quiescent Current Change	Line	ΔI_{BI}	1	21.5V ≦ V_{IN} ≦ 33.5V, I_{OUT} = 200mA		—	—	0.8	mA
	Load	ΔI_{BO}	1	5mA ≦ I_{OUT} ≦ 350mA		—	—	0.5	
Output Noise Voltage		V_{NO}	2	Ta = 25°C, 10Hz ≦ f ≦ 100kHz		—	90	490	μV_{rms}
Ripple Rejection		R.R.	3	f = 120Hz, I_{OUT} = 100mA 22V ≦ V_{IN} ≦ 32V, T_j = 25°C		53	60	—	dB
Short Circuit Current Limit		I_{SC}	1	T_j = 25°C		—	960	—	mA
Dropout Voltage		V_D	1	Ta = 25°C		—	1.7	—	V
Average Temperature Coefficient Of Output Voltage		T_{CVO}	1	I_{OUT} = 5mA		—	−2.5	—	mV / °C

TA78M20S

ELECTRICAL CHARACTERISTICS

(V_{IN} = 29V, I_{OUT} = 350mA, 0°C ≦ T_j ≦ 125°C, C_{IN} = 0.33μF, C_{OUT} = 0.1μF, unless otherwise noted)

CHARACTERISTIC		SYMBOL	TEST CIR-CUIT	TEST CONDITION		MIN.	TYP.	MAX.	UNIT
Output Voltage		V_{OUT}	1	T_j = 25°C		19.2	20.0	20.8	V
Line Regulation		Reg.line	1	T_j = 25°C	23V ≦ V_{IN} ≦ 35V I_{OUT} = 200mA	—	10	100	mV
					24V ≦ V_{IN} ≦ 35V I_{OUT} = 200mA	—	6	50	
Load Regulation		Reg.load	1	T_j = 25°C	5mA ≦ I_{OUT} ≦ 500mA	—	28	400	mV
					5mA ≦ I_{OUT} ≦ 200mA	—	10	200	
Output Voltage		V_{OUT}	1	T_j = 25°C	23V ≦ V_{IN} ≦ 35V 5mA ≦ I_{OUT} ≦ 350mA	19.0	—	21.0	V
Quiescent Current		I_B	1	T_j = 25°C		—	4.9	8.0	mA
Quiescent Current Change	Line	ΔI_{BI}	1	23.5V ≦ V_{IN} ≦ 35.5V, I_{OUT} = 200mA		—	—	0.8	mA
	Load	ΔI_{BO}	1	5mA ≦ I_{OUT} ≦ 350mA		—	—	0.5	
Output Noise Voltage		V_{NO}	2	Ta = 25°C, 10Hz ≦ f ≦ 100kHz		—	95	540	μV_{rms}
Ripple Rejection		R.R.	3	f = 120Hz, I_{OUT} = 100mA 24V ≦ V_{IN} ≦ 34V, T_j = 25°C		53	60	—	dB
Short Circuit Current Limit		I_{SC}	1	T_j = 25°C		—	960	—	mA
Dropout Voltage		V_D	1	Ta = 25°C		—	1.7	—	V
Average Temperature Coefficient Of Output Voltage		T_{CVO}	1	I_{OUT} = 5mA		—	−3.0	—	mV / °C

TA78M24S

ELECTRICAL CHARACTERISTICS

(V_{IN} = 33V, I_{OUT} = 350mA, 0°C ≦ T_j ≦ 125°C, C_{IN} = 0.33μF, C_{OUT} = 0.1μF, unless otherwise noted)

CHARACTERISTIC		SYMBOL	TEST CIR-CUIT	TEST CONDITION		MIN.	TYP.	MAX.	UNIT
Output Voltage		V_{OUT}	1	T_j = 25°C		23.0	24.0	25.0	V
Line Regulation		Reg.line	1	T_j = 25°C	27V ≦ V_{IN} ≦ 38V I_{OUT} = 200mA	—	12	100	mV
					28V ≦ V_{IN} ≦ 38V I_{OUT} = 200mA	—	7	50	
Load Regulation		Reg.load	1	T_j = 25°C	5mA ≦ I_{OUT} ≦ 500mA	—	30	480	mV
					5mA ≦ I_{OUT} ≦ 200mA	—	10	240	
Output Voltage		V_{OUT}	1	T_j = 25°C	27V ≦ V_{IN} ≦ 38V 5mA ≦ I_{OUT} ≦ 350mA	22.8	—	25.2	V
Quiescent Current		I_B	1	T_j = 25°C		—	5.0	8.0	mA
Quiescent Current Change	Line	ΔI_{BI}	1	27.5V ≦ V_{IN} ≦ 38.5V, I_{OUT} = 200mA		—	—	0.8	mA
	Load	ΔI_{BO}	1	5mA ≦ I_{OUT} ≦ 350mA		—	—	0.5	
Output Noise Voltage		V_{NO}	2	Ta = 25°C, 10Hz ≦ f ≦ 100kHz		—	115	650	μV_{rms}
Ripple Rejection		R.R.	3	f = 120Hz, I_{OUT} = 100mA 28V ≦ V_{IN} ≦ 38V, T_j = 25°C		50	57	—	dB
Short Circuit Current Limit		I_{SC}	1	T_j = 25°C		—	960	—	mA
Dropout Voltage		V_D	1	Ta = 25°C		—	1.7	—	V
Average Temperature Coefficient Of Output Voltage		T_{CVO}	1	I_{OUT} = 5mA		—	−3.5	—	mV / °C