STPS40150CG/CT/CW

HIGH VOLTAGE POWER SCHOTTKY RECTIFIER

MAJOR PRODUCTS CHARACTERISTICS

$I_{F(AV)}$	2 x 20 A
V_{RRM}	150 V
Tj (max)	175°C
V_F (max)	0.75 V

FEATURES AND BENEFITS

- HIGH JUNCTION TEMPERATURE CAPABILITY
- LOW LEAKAGE CURRENT
- GOOD TRADE OFF BETWEEN LEAKAGE CURRENT AND FORWARD VOLTAGE DROP
- LOW THERMAL RESISTANCE
- HIGH FREQUENCY OPERATION

DESCRIPTION

Dual center tap Schottky rectifiers suited for high frequency switch mode power supply.

Packaged in TO-247, TO-220AB and D^2PAK, this devices is intended for use to enhance the reliability of the application.

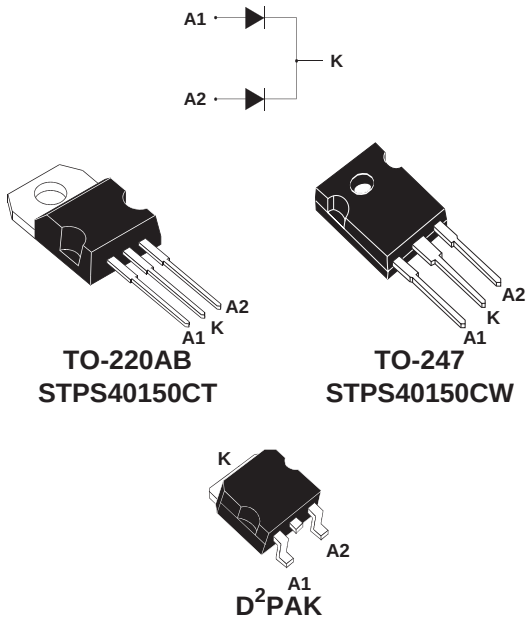

TO-220AB
STPS40150CT

TO-247
STPS40150CW

D^2PAK
STPS40150CG

ABSOLUTE RATINGS (limiting values, per diode)

Symbol	Parameter			Value	Unit
V_{RRM}	Repetitive peak reverse voltage			150	V
$I_{F(RMS)}$	RMS forward current			60	A
$I_{F(AV)}$	Average forward current	Tc = 150°C δ = 0.5	Per diode Per device	20 40	A
I_{FSM}	Surge non repetitive forward current	tp = 10 ms Sinusoidal		250	A
P_{ARM}	Repetitive peak avalanche power	tp = 1µs Tj = 25°C		14100	W
T_{stg}	Storage temperature range			- 65 to + 175	°C
Tj	Maximum operating junction temperature *			175	°C
dV/dt	Critical rate of rise of reverse voltage			10000	V/µs

$$* : \frac{dPtot}{dTj} < \frac{1}{Rth(j-a)}$$ thermal runaway condition for a diode on its own heatsink

THERMAL RESISTANCES

Symbol	Parameter			Value	Unit
$R_{th(j-c)}$	Junction to case	TO-220AB / D^2PAK	Per diode Total	1.2 0.85	°C/W
$R_{th(j-c)}$	Junction to case	TO-247	Per diode Total	1.2 0.85	°C/W
$R_{th(c)}$			Coupling	0.5	°C/W

When the diodes 1 and 2 are used simultaneously :
Δ Tj(diode 1) = P(diode1) x $R_{th(j-c)}$(Per diode) + P(diode 2) x $R_{th(c)}$

STATIC ELECTRICAL CHARACTERISTICS (per diode)

Symbol	Parameter	Tests Conditions		Min.	Typ.	Max.	Unit
I_R *	Reverse leakage current	Tj = 25°C	$V_R = V_{RRM}$		2	8	µA
		Tj = 125°C			2	11	mA
V_F *	Forward voltage drop	Tj = 25°C	I_F = 20 A			0.92	V
		Tj = 125°C	I_F = 20 A		0.69	0.75	
		Tj = 25°C	I_F = 40 A			1.00	
		Tj = 125°C	I_F = 40 A		0.79	0.86	

Pulse test : * tp = 380 µs, δ < 2%

To evaluate the conduction losses use the following equation :

$P = 0.64 \times I_{F(AV)} + 0.0055\ I_F^2{}_{(RMS)}$

Fig. 1: Conduction losses versus average current (per diode).

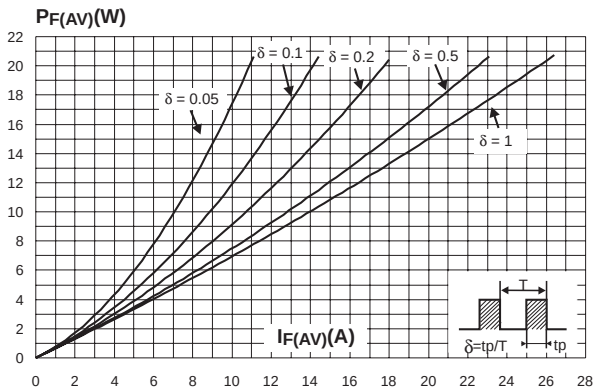

Fig. 2: Normalized avalanche power derating versus pulse duration.

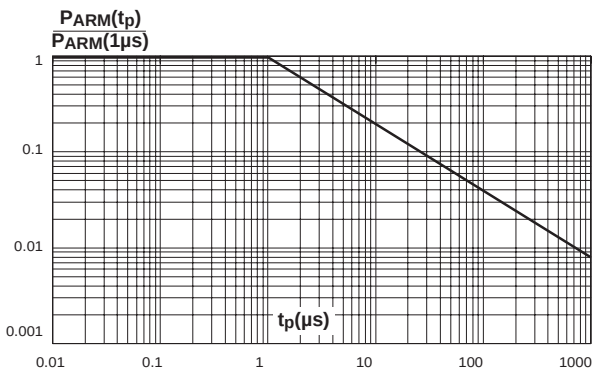

PACKAGE MECHANICAL DATA

TO-247

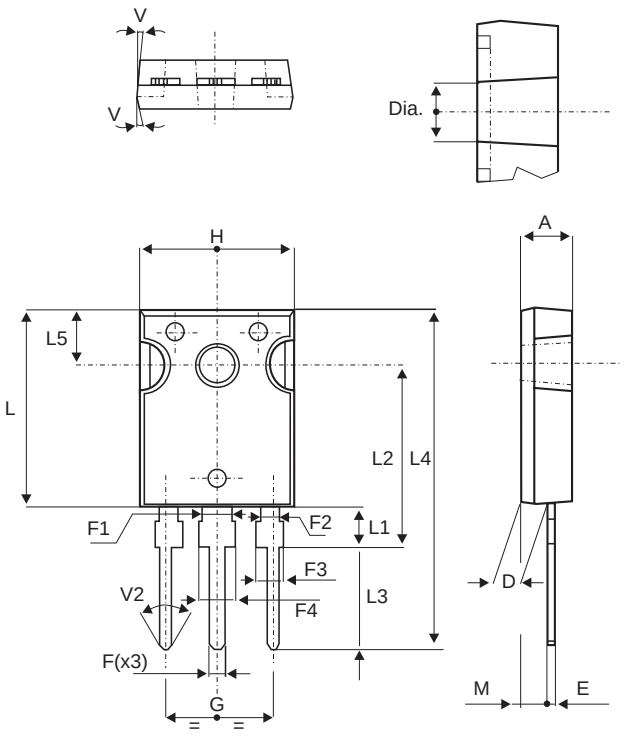

REF.	DIMENSIONS					
	Millimeters			Inches		
	Min.	Typ.	Max.	Min.	Typ.	Max.
A	4.85		5.15	0.191		0.203
D	2.20		2.60	0.086		0.102
E	0.40		0.80	0.015		0.031
F	1.00		1.40	0.039		0.055
F1		3.00			0.118	
F2		2.00			0.078	
F3	2.00		2.40	0.078		0.094
F4	3.00		3.40	0.118		0.133
G		10.90			0.429	
H	15.45		15.75	0.608		0.620
L	19.85		20.15	0.781		0.793
L1	3.70		4.30	0.145		0.169
L2		18.50			0.728	
L3	14.20		14.80	0.559		0.582
L4		34.60			1.362	
L5		5.50			0.216	
M	2.00		3.00	0.078		0.118
V		5°			5°	
V2		60°			60°	
Dia.	3.55		3.65	0.139		0.143

- Cooling method : C
- Recommended torque value : 0.8m.N
- Maximum torque value : 1.0m.N

Ordering type	Marking	Package	Weight	Base qty	Delivery mode
STPS40150CT	STPS40150CT	TO-220AB	2g	50	Tube
STPS40150CW	STPS40150CW	TO-247	4.4g	30	Tube
STPS40150CG	STPS40150CG	D^2PAK	1.48g	50	Tube
STPS40150CG-TR	STPS40150CG-TR	D^2PAK	1.48g	1000	Tape & reel

- Epoxy meets UL94,V0