STPS30L60CW/CT/CG/CR

POWER SCHOTTKY RECTIFIER

MAIN PRODUCT CHARACTERISTICS

$I_{F(AV)}$	2 x 15 A
V_{RRM}	60 V
Tj (max)	150°C
V_F (max)	0.56 V

FEATURES AND BENEFITS

- NEGLIGIBLE SWITCHING LOSSES
- LOW FORWARD VOLTAGE DROP
- LOW THERMAL RESISTANCE
- AVALANCHE CAPABILITY SPECIFIED

DESCRIPTION

Dual center tap Schottky rectifiers suited for Switched Mode Power Supplies and high frequency DC to DC converters. Packaged in TO-220, D^2PAK, I^2PAK and TO-247 this device is intended for use in high frequency inverters.

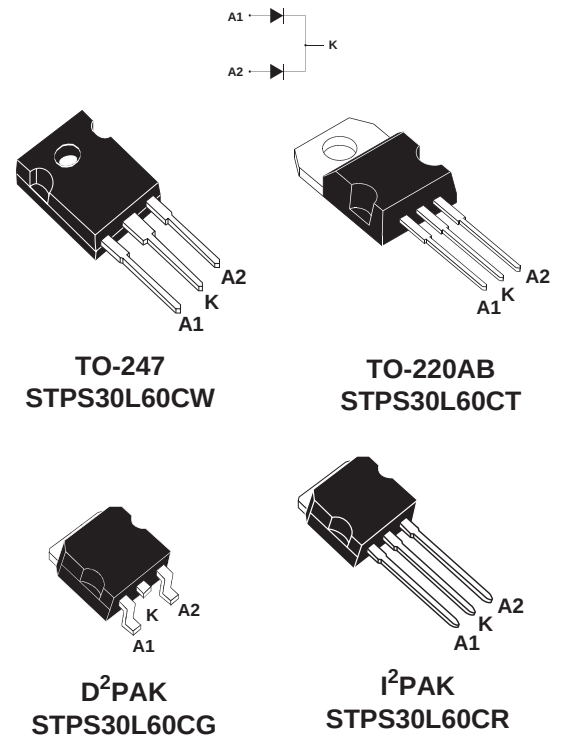

ABSOLUTE RATINGS (limiting values, per diode)

Symbol	Parameter			Value	Unit
V_{RRM}	Repetitive peak reverse voltage			60	V
$I_{F(RMS)}$	RMS forward current			30	A
$I_{F(AV)}$	Average forward current	Tc = 130°C δ = 0.5	Per diode Per device	15 30	A
I_{FSM}	Surge non repetitive forward current	tp = 10 ms Sinusoidal		230	A
I_{RRM}	Repetitive peak reverse current	tp=2 µs square F=1kHz		2	A
P_{ARM}	Repetitive peak avalanche power	tp = 1µs Tj = 25°C		7800	W
T_{stg}	Storage temperature range			- 65 to + 175	°C
Tj	Maximum operating junction temperature *			150	°C
dV/dt	Critical rate of rise of reverse voltage			10000	V/µs

$* : \frac{dPtot}{dTj} < \frac{1}{Rth(j-a)}$ thermal runaway condition for a diode on its own heatsink

THERMAL RESISTANCES

Symbol	Parameter		Value	Unit
$R_{th(j-c)}$	Junction to case	Per diode Total	1.5 0.8	°C/W
$R_{th(c)}$		Coupling	0.1	°C/W

When the diodes 1 and 2 are used simultaneously :
Δ Tj(diode 1) = P(diode1) x $R_{th(j-c)}$(Per diode) + P(diode 2) x $R_{th(c)}$

STATIC ELECTRICAL CHARACTERISTICS (per diode)

Symbol	Parameter	Tests Conditions		Min.	Typ.	Max.	Unit
I_R *	Reverse leakage current	Tj = 25°C	$V_R = V_{RRM}$			480	µA
		Tj = 125°C			77	130	mA
V_F *	Forward voltage drop	Tj = 25°C	I_F = 15 A			0.6	V
		Tj = 125°C	I_F = 15 A		0.5	0.56	
		Tj = 25°C	I_F = 30 A			0.75	
		Tj = 125°C	I_F = 30 A		0.65	0.7	

Pulse test : * tp = 380 µs, δ < 2%

To evaluate the maximum conduction losses use the following equation :
$P = 0.42 \times I_{F(AV)} + 0.009\ I_F^2{}_{(RMS)}$

Fig. 1: Average forward power dissipation versus average forward current (per diode).

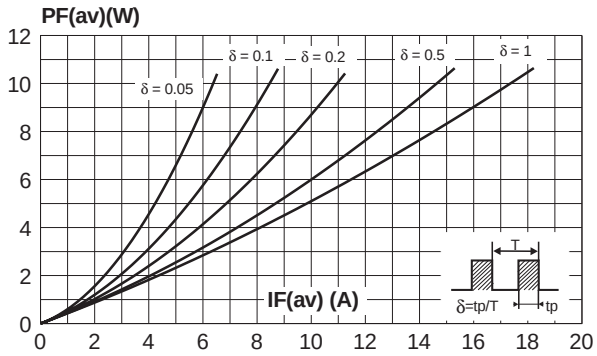

Fig. 2: Average forward current versus ambient temperature(δ = 0.5, per diode).

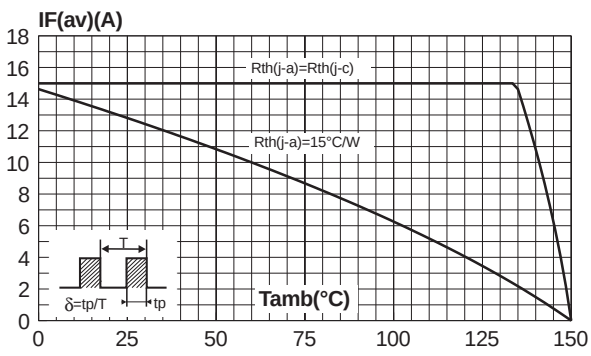

PACKAGE MECHANICAL DATA

TO-247

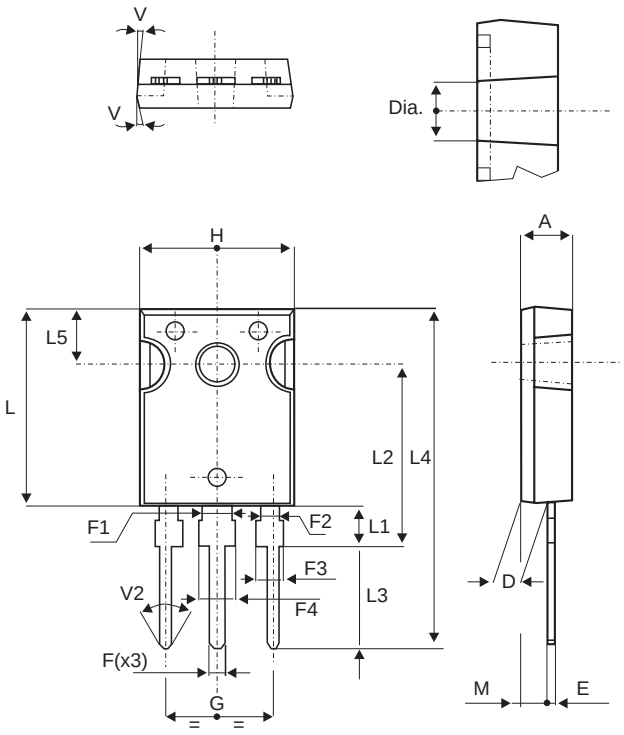

REF.	DIMENSIONS					
	Millimeters			Inches		
	Min.	Typ.	Max.	Min.	Typ.	Max.
A	4.85		5.15	0.191		0.203
D	2.20		2.60	0.086		0.102
E	0.40		0.80	0.015		0.031
F	1.00		1.40	0.039		0.055
F1		3.00			0.118	
F2		2.00			0.078	
F3	2.00		2.40	0.078		0.094
F4	3.00		3.40	0.118		0.133
G		10.90			0.429	
H	15.45		15.75	0.608		0.620
L	19.85		20.15	0.781		0.793
L1	3.70		4.30	0.145		0.169
L2		18.50			0.728	
L3	14.20		14.80	0.559		0.582
L4		34.60			1.362	
L5		5.50			0.216	
M	2.00		3.00	0.078		0.118
V		5°			5°	
V2		60°			60°	
Dia.	3.55		3.65	0.139		0.143

- COOLING METHOD : C
- RECOMMENDED TORQUE VALUE : 0.8M.N
- MAXIMUM TORQUE VALUE : 1.0M.N

Ordering type	Marking	Package	Weight	Base qty	Delivery mode
STPS30L60CW	STPS30L60CW	TO-247	4.4g	50	Tube
STPS30L60CT	STPS30L60CT	TO-220AB	2.3g	50	Tube
STPS30L60CG	STPS30L60CG	D^2PAK	1.5g	50	Tube
STPS30L60CR	STPS30L60CR	I^2PAK	1.49 g	50	Tube

- EPOXY MEETS UL94,V0