STPS20L40CF/CW/CT/CFP

LOW DROP POWER SCHOTTKY RECTIFIER

MAJOR PRODUCTS CHARACTERISTICS

$I_{F(AV)}$	2 x 10 A
V_{RRM}	40 V
Tj (max)	150°C
V_F (max)	0.5 V

FEATURES AND BENEFITS

- LOW FORWARD VOLTAGE DROP MEANING VERY SMALL CONDUCTION LOSSES
- LOW DYNAMIC LOSSES AS A RESULT OF THE SCHOTTKY BARRIER
- INSULATED PACKAGE: ISOWATT220AB, TO-220FPAB
  Insulating voltage = 200V DC
  Capacitance = 12pF
- AVALANCHE CAPABILITY SPECIFIED

DESCRIPTION

Dual center tap Schottky rectifiers designed for high frequency switched mode power supplies and DC to DC converters.

These devices are intended for use in low voltage, high frequency inverters, free-wheeling and polarity protection applications.

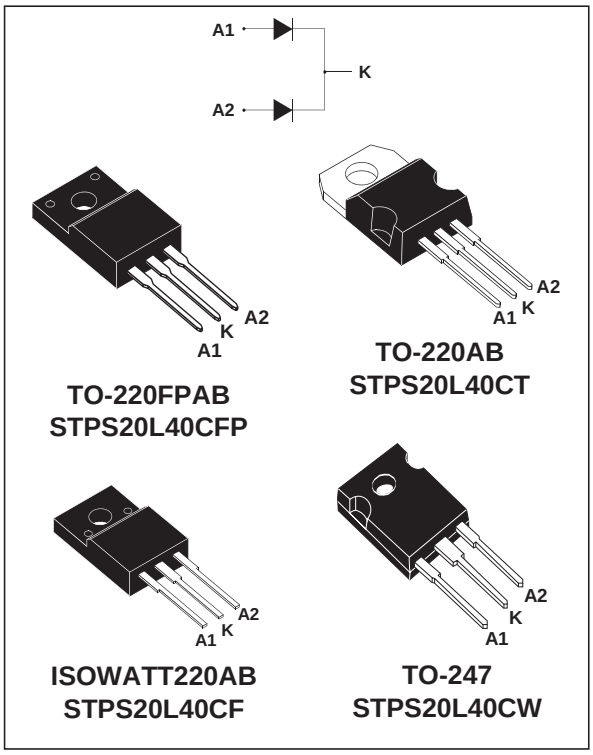

ABSOLUTE RATINGS (limiting values, per diode)

Symbol	Parameter				Value	Unit
V_{RRM}	Repetitive peak reverse voltage				40	V
$I_{F(RMS)}$	RMS forward current				30	A
$I_{F(AV)}$	Average forward current	TO-220AB TO-247	Tc = 135°C δ = 0.5	Per diode Per device	10 20	A
		ISOWATT220AB TO-220FPAB	Tc = 115°C δ = 0.5	Per diode Per device	10 20	A
I_{FSM}	Surge non repetitive forward current		tp = 10 ms Sinusoidal		180	A
I_{RRM}	Peak repetitive reverse current		tp = 2 µs square F=1kHz		1	A
I_{RSM}	Non repetitive peak reverse current		tp = 100 µs square		2	A
P_{ARM}	Repetitive peak avalanche power		tp = 1µs Tj = 25°C		4000	W
T_{stg}	Storage temperature range				- 65 to + 150	°C
Tj	Maximum operating junction temperature *				150	°C
dV/dt	Critical rate of rise of reverse voltage				10000	V/µs

* : $\frac{dPtot}{dTj} < \frac{1}{Rth(j-a)}$ thermal runaway condition for a diode on its own heatsink

THERMAL RESISTANCES

Symbol	Parameter			Value	Unit
$R_{th(j-c)}$	Junction to case	ISOWATT220AB TO-220FPAB	Per diode Total Coupling	4.5 3.5 2.5	°C/W
$R_{th(j-c)}$	Junction to case	TO-247	Per diode Total Coupling	2.2 1.20 0.3	°C/W
$R_{th(j-c)}$	Junction to case	TO-220AB	Per diode Total Coupling	2.2 1.3 0.3	°C/W

When the diodes 1 and 2 are used simultaneously :
Δ Tj(diode 1) = P(diode1) x $R_{th(j-c)}$(Per diode) + P(diode 2) x $R_{th(c)}$

STATIC ELECTRICAL CHARACTERISTICS (per diode)

Symbol	Parameter	Tests Conditions		Min.	Typ.	Max.	Unit
I_R *	Reverse leakage current	Tj = 25°C	$V_R = V_{RRM}$			0.7	mA
		Tj = 100°C			15	35	mA
V_F *	Forward voltage drop	Tj = 25°C	I_F = 10 A			0.55	V
		Tj = 125°C	I_F = 10 A		0.44	0.5	
		Tj = 25°C	I_F = 20 A			0.73	
		Tj = 125°C	I_F = 20 A		0.62	0.72	

Pulse test : * tp = 380 µs, δ < 2%

To evaluate the conduction losses use the following equation :
$P = 0.28 \times I_{F(AV)} + 0.022\ I_F^2{}_{(RMS)}$

Fig. 1: Average forward power dissipation versus average forward current (per diode).

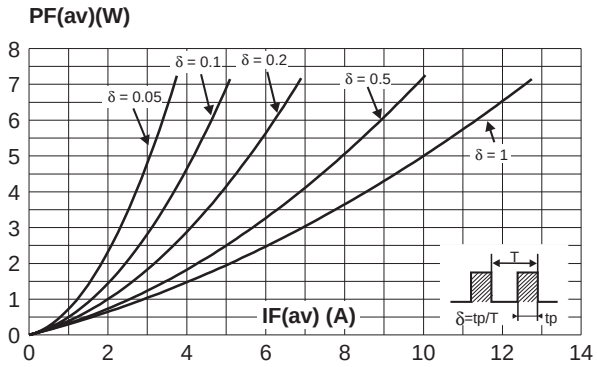

Fig. 2: Average forward current versus ambient temperature(δ = 0.5, per diode).

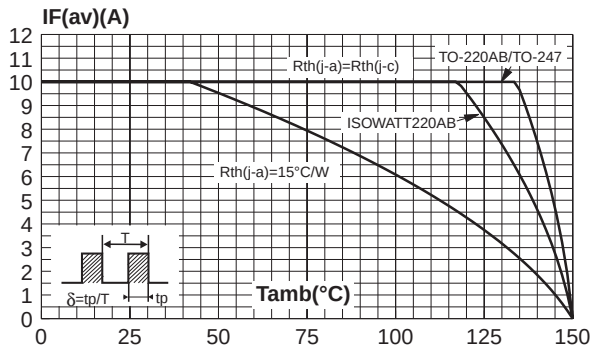

PACKAGE MECHANICAL DATA

TO-247

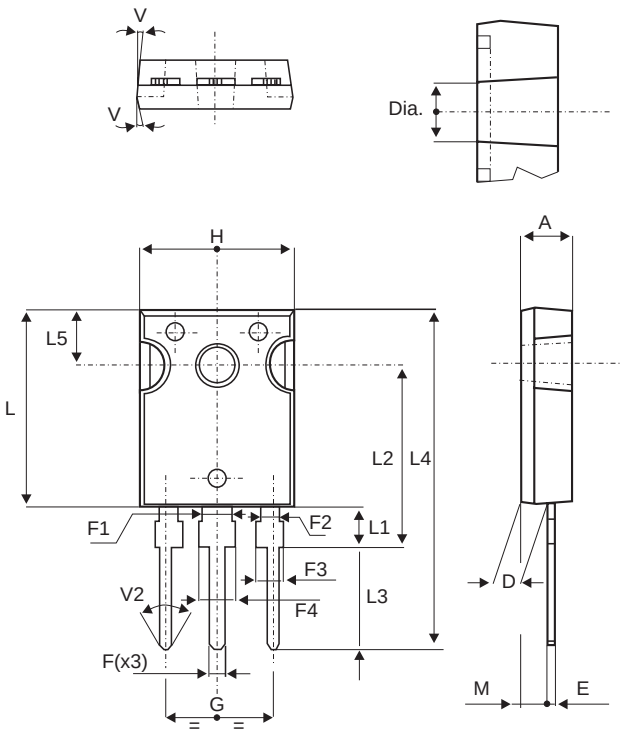

REF.	DIMENSIONS					
	Millimeters			Inches		
	Min.	Typ.	Max.	Min.	Typ.	Max.
A	4.85		5.15	0.191		0.203
D	2.20		2.60	0.086		0.102
E	0.40		0.80	0.015		0.031
F	1.00		1.40	0.039		0.055
F1		3.00			0.118	
F2		2.00			0.078	
F3	2.00		2.40	0.078		0.094
F4	3.00		3.40	0.118		0.133
G		10.90			0.429	
H	15.45		15.75	0.608		0.620
L	19.85		20.15	0.781		0.793
L1	3.70		4.30	0.145		0.169
L2		18.50			0.728	
L3	14.20		14.80	0.559		0.582
L4		34.60			1.362	
L5		5.50			0.216	
M	2.00		3.00	0.078		0.118
V		5°			5°	
V2		60°			60°	
Dia.	3.55		3.65	0.139		0.143

- Cooling method : C
- Recommended torque value : 0.8m.N
- Maximum torque value : 1.0m.N

Ordering type	Marking	Package	Weight	Base qty	Delivery mode
STPS20L40CF	STPS20L40CF	ISOWATT220AB	2.1g	50	Tube
STPS20L40CFP	STPS20L40CFP	TO-220FPAB	2g	50	Tube
STPS20L40CT	STPS20L40CT	TO-220AB	2g	50	Tube
STPS20L40CW	STPS20L40CW	TO-247	4.4g	30	Tube

- Epoxy meets UL94,V0