STPS30L30C

Low drop power Schottky rectifier

Features

- Very small conduction losses
- Negligible switching losses
- Extremely fast switching
- Low forward voltage drop
- Low thermal resistance
- Avalanche capability specified

Description

This dual center tap Schottky rectifier is suited for switch mode power supplies and high frequency DC to DC converters.

Packaged in TO-220AB, D^2PAK and I^2PAK, this device is intended for use in low voltage, high frequency inverters, free-wheeling and polarity protection applications.

Table 1. Device summary

$I_{F(AV)}$	2 x 15 A
V_{RRM}	30 V
T_j (max)	150 °C
V_F(typ)	0.37 V

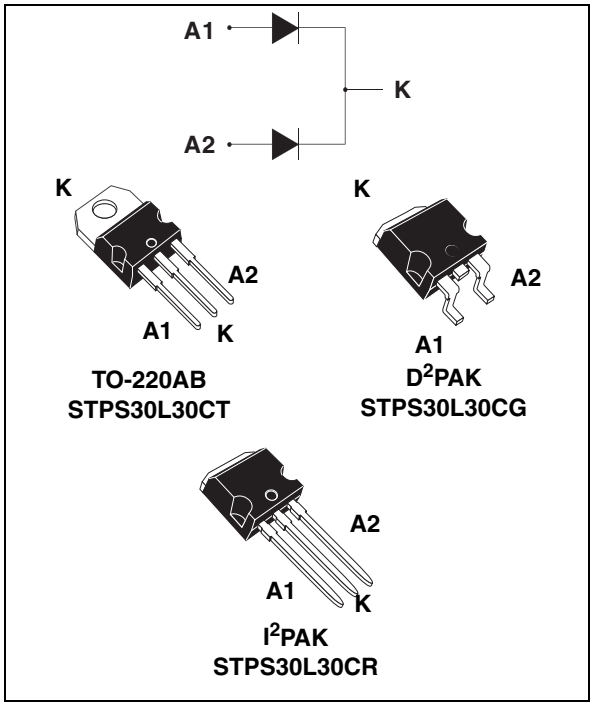

Figure 1. Electrical characteristics [a]

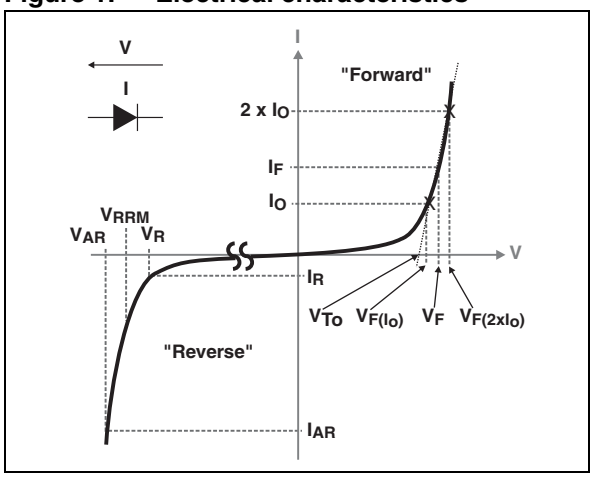

a. V_{ARM} and I_{ARM} must respect the reverse safe operating area defined in *Figure 12* V_{AR} and I_{AR} are pulse measurements (t_p < 1 µs). V_R, I_R, V_{RRM} and V_F, are static characteristics

1 Characteristics

Table 2. Absolute ratings (limiting values per diode)

Symbol	Parameter			Value	Unit
V_{RRM}	Repetitive peak reverse voltage			30	V
$I_{F(RMS)}$	Forward rms current			30	A
$I_{F(AV)}$	Average forward current $\delta = 0.5$	$T_c = 140$ °C,	Per diode Per device	15 30	A
I_{FSM}	Surge non repetitive forward current	$t_p = 10$ ms sinusoidal,		220	A
I_{RRM}	Peak repetitive reverse current	$t_p = 2$ µs square, F= 1 kHz square		1	A
I_{RSM}	Non repetitive peak reverse current	$t_p = 100$ µs square		3	A
P_{ARM} (1)	Repetitive peak avalanche power	$t_p = 1$ µs $T_j = 25$ °C		5300	W
V_{ARM} (2)	Maximum repetitive peak avalanche voltage	$t_p < 1$ µs $T_j < 150$ °C $I_{AR} < 35$ A		45	V
V_{ASM} (2)	Maximum single pulse peak avalanche voltage	$t_p < 1$ µs $T_j < 150$ °C $I_{AR} < 35$ A		45	V
T_{stg}	Storage temperature range			-65 to + 175	°C
T_j	Maximum operating junction temperature (3)			150	°C
dV/dt	Critical rate of rise of reverse voltage			10000	V/µs

1. For temperature or pulse time duration deratings, refer to *Figure 4.* and *Figure 5.*. More details regarding the avalanche energy measurements and diode validation in the avalanche are provided in the application notes AN1768 and AN2025.
2. Refer to *Figure 12*
3. $\frac{dPtot}{dTj} < \frac{1}{Rth(j-a)}$ condition to avoid thermal runaway for a diode on its own heatsink

Table 3. Thermal resistance(1)

Symbol	Parameter		Value	Unit
$R_{th(j-c)}$	Junction to case	Per diode Total	1.5 0.8	°C/W
$R_{th(c)}$	Coupling		0.1	

1. When the diodes 1 and 2 are used simultaneously: ΔT_j(diode 1) = P(diode1) x $R_{th(j-c)}$(Per diode) + P(diode 2) x $R_{th(c)}$

Table 4. Static electrical characteristics (per diode)

Symbol	Parameter	Test conditions		Min.	Typ.	Max.	Unit
I_R (1)	Reverse leakage current	$T_j = 25$ °C	$V_R = V_{RRM}$			1.5	mA
		$T_j = 125$ °C			170	350	mA
V_F (1)	Forward voltage drop	$T_j = 25$ °C	$I_F = 15$ A			0.46	V
		$T_j = 125$ °C			0.33	0.37	
		$T_j = 25$ °C	$I_F = 30$A			0.57	
		$T_j = 125$ °C			0.43	0.5	

1. Pulse test: $t_p = 380$ µs, $\delta < 2\%$

To evaluate the conduction losses use the following equation:

$$P = 0.24 \times I_{F(AV)} + 0.009 \times I_F^2{}_{(RMS)}$$

3 Ordering information

Table 8. Ordering information

Order code	Marking	Package	Weight	Base qty	Delivery mode
STPS30L30CT	STPS30L30CT	TO-220AB	2.0 g	50	Tube
STPS30L30CG	STPS30L30CR	D^2PAK	1.8 g	50	Tube
STPS30L30CG-TR	STPS30L30CG	D^2PAK	1.8 g	1000	Tape and reel
STPS30L30CG-TR	STPS30L30CG	I^2PAK	1.49 g	50	Tube