STPS20L60CT/CG/CR

POWER SCHOTTKY RECTIFIER

MAIN PRODUCT CHARACTERISTICS

$I_{F(AV)}$	2 x 10 A
V_{RRM}	60 V
Tj (max)	150 °C
V_F (max)	0.56 V

FEATURES AND BENEFITS

- LOW FORWARD VOLTAGE DROP
- NEGLIGIBLE SWITCHING LOSSES
- LOW THERMAL RESISTANCE
- AVALANCHE CAPABILITY SPECIFIED

DESCRIPTION

Dual center tap Schottky rectifiers suited for Switched Mode Power Supplies and high frequency DC to DC converters.

Packaged in TO-220AB, I^2PAK and D^2PAK, this device is intended for use in high frequency inverters.

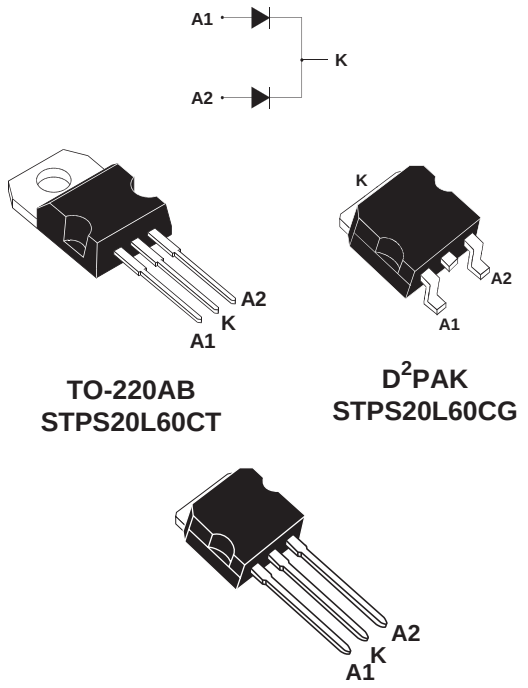

TO-220AB
STPS20L60CT

D^2PAK
STPS20L60CG

I^2PAK
STPS20L60CR

ABSOLUTE RATINGS (limiting values, per diode)

Symbol	Parameter			Value	Unit
V_{RRM}	Repetitive peak reverse voltage			60	V
$I_{F(RMS)}$	RMS forward current			30	A
$I_{F(AV)}$	Average forward current	Tc = 140°C δ = 0.5	Per diode Per device	10 20	A
I_{FSM}	Surge non repetitive forward current	tp = 10 ms Sinusoidal		220	A
I_{RRM}	Repetitive peak reverse current	tp = 2 µs square F = 1kHz		1	A
P_{ARM}	Repetitive peak avalanche power	tp = 1µs Tj = 25°C		5800	W
T_{stg}	Storage temperature range			- 65 to + 175	°C
Tj	Maximum operating junction temperature *			150	°C
dV/dt	Critical rate of rise of reverse voltage			10000	V/µs

* : $\frac{dPtot}{dTj} < \frac{1}{Rth(j-a)}$ thermal runaway condition for a diode on its own heatsink

THERMAL RESISTANCE

Symbol	Parameter			Value	Unit
$R_{th\ (j-c)}$	Junction to case	TO-220AB / I^2PAK / D^2PAK	Per diode Total	1.6 0.85	°C/W
$R_{th\ (c)}$		TO-220AB / I^2PAK / D^2PAK	Coupling	0.1	°C/W

When the diodes 1 and 2 are used simultaneously :
Δ Tj(diode 1) = P(diode1) x $R_{th(j-c)}$(Per diode) + P(diode 2) x $R_{th(c)}$

STATIC ELECTRICAL CHARACTERISTICS (per diode)

Symbol	Parameter	Tests conditions		Min.	Typ.	Max.	Unit
I_R *	Reverse leakage current	Tj = 25°C	$V_R = V_{RRM}$			350	µA
		Tj = 125°C			65	95	mA
V_F *	Forward voltage drop	Tj = 25°C	I_F = 10 A			0.6	V
		Tj = 125°C	I_F = 10 A		0.48	0.56	
		Tj = 25°C	I_F = 20 A			0.74	
		Tj = 125°C	I_F = 20 A		0.62	0.7	

Pulse test : * tp = 380 µs, δ < 2%

To evaluate the conduction losses use the following equation :
$P = 0.42x\ I_{F(AV)} + 0.014\ I_F^2{}_{(RMS)}$

Fig. 1: Average forward power dissipation versus average forward current (per diode).

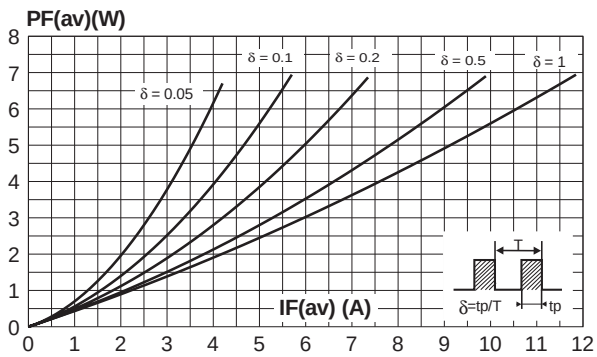

Fig. 2: Average current versus ambient temperature (δ=0.5) (per diode).

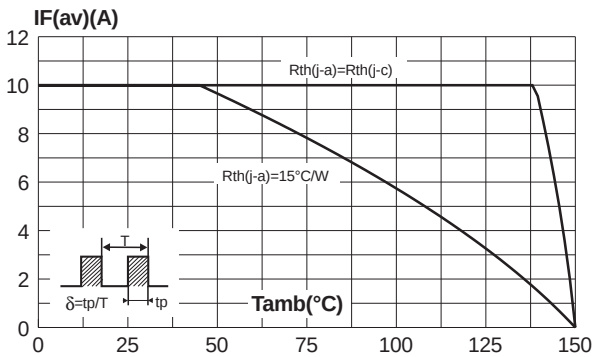

PACKAGE MECHANICAL DATA
TO-220AB

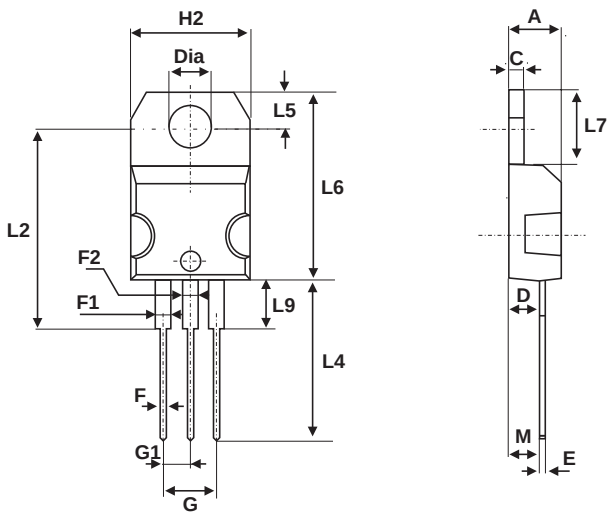

REF.	DIMENSIONS			
	Millimeters		Inches	
	Min.	Max.	Min.	Max.
A	4.40	4.60	0.173	0.181
C	1.23	1.32	0.048	0.051
D	2.40	2.72	0.094	0.107
E	0.49	0.70	0.019	0.027
F	0.61	0.88	0.024	0.034
F1	1.14	1.70	0.044	0.066
F2	1.14	1.70	0.044	0.066
G	4.95	5.15	0.194	0.202
G1	2.40	2.70	0.094	0.106
H2	10	10.40	0.393	0.409
L2	16.4 typ.		0.645 typ.	
L4	13	14	0.511	0.551
L5	2.65	2.95	0.104	0.116
L6	15.25	15.75	0.600	0.620
L7	6.20	6.60	0.244	0.259
L9	3.50	3.93	0.137	0.154
M	2.6 typ.		0.102 typ.	
Diam.	3.75	3.85	0.147	0.151

- COOLING METHOD: C
- RECOMMENDED TORQUE VALUE: 0.55 M.N
- MAXIMUM TORQUE VALUE: 0.70 M.N

Ordering type	Marking	Package	Weight	Base qty	Delivery mode
STPS20L60CT	STPS20L60CT	TO-220AB	2.2g	50	Tube
STPS20L60CT	STPS20L60CT	TO-220AB	2.2g	1000	Bulk
STPS20L60CG	STPS20L60CG	D^2PAK	1.48 g	50	Tube
STPS20L60CG-TR	STPS20L60CG	D^2PAK	1.48 g	1000	Tape & reel
STPS20L60CR	STPS20L60CR	I2PAK	1.49 g	50	Tube

- EPOXY MEETS UL94,V0