STPS20H100CT/CF/CG/CG-1

HIGH VOLTAGE POWER SCHOTTKY RECTIFIER

MAIN PRODUCT CHARACTERISTICS

$I_{F(AV)}$	2 x 10 A
V_{RRM}	100 V
Tj	175°C
V_F (max)	0.64 V

FEATURES AND BENEFITS

- NEGLIGIBLE SWITCHING LOSSES
- HIGH JUNCTION TEMPERATURE CAPABILITY
- GOOD TRADE OFF BETWEEN LEAKAGE CURRENT AND FORWARD VOLTAGE DROP
- LOW LEAKAGE CURRENT
- AVALANCHE RATED
- INSULATED PACKAGE: ISOWATT220AB
  Insulating Voltage = 2000V DC
  Capacitance = 45 pF

DESCRIPTION

Dual center tap schottky rectifier designed for high frequency miniature Switched Mode Power Supplies such as adaptators and on board DC/DC converters.

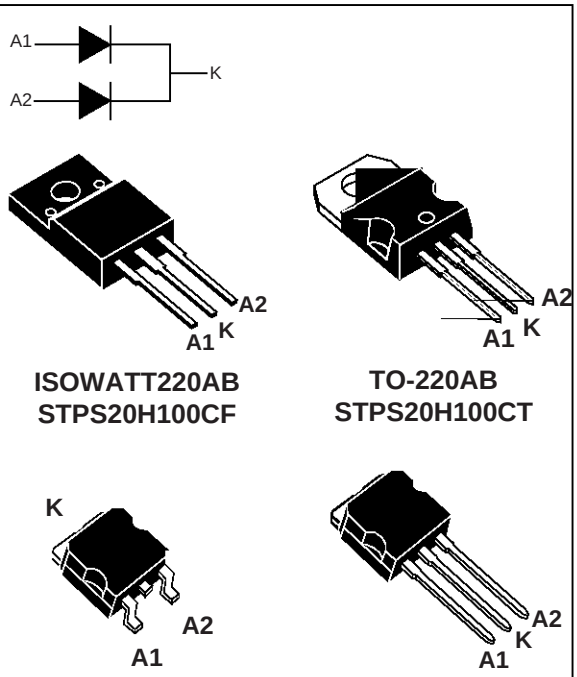

ABSOLUTE RATINGS (limiting values, per diode)

Symbol	Parameter				Value	Unit
V_{RRM}	Repetitive peak reverse voltage				100	V
$I_{F(RMS)}$	RMS forward current				30	A
$I_{F(AV)}$	Average forward current $\delta = 0.5$	TO-220AB D^2PAK / I^2PAK	Tc = 160°C	per diode per device	10 20	A
		ISOWATT220AB	Tc = 145°C			
I_{FSM}	Surge non repetitive forward current		tp = 10 ms sinusoidal		250	A
I_{RRM}	Repetitive peak reverse current		tp = 2 µs square F = 1kHz		1	A
I_{RSM}	Non repetitive peak reverse current		tp = 100 µs square		3	A
T_{stg}	Storage temperature range				- 65 to + 175	°C
Tj	Maximum operating junction temperature *				175	°C
dV/dt	Critical rate of rise of reverse voltage				10000	V/µs

$$* : \frac{dPtot}{dTj} < \frac{1}{Rth(j-a)}$$ thermal runaway condition for a diode on its own heatsink

THERMAL RESISTANCES

Symbol	Parameter			Value	Unit
$R_{th\ (j-c)}$	Junction to case	TO-220AB / D^2PAK / I^2PAK	Per diode	1.6	°C/W
		ISOWATT220AB	Per diode	4	
		TO-220AB / D^2PAK / I^2PAK	Total	0.9	
		ISOWATT220AB	Total	3.2	°C/W
$R_{th\ (c)}$		TO-220AB / D^2PAK / I^2PAK	Coupling	0.15	
		ISOWATT220AB	Coupling	2.5	

When the diodes 1 and 2 are used simultaneously :
Δ Tj(diode 1) = P(diode1) x $R_{th(j-c)}$(Per diode) + P(diode 2) x $R_{th(c)}$

STATIC ELECTRICAL CHARACTERISTICS (per diode)

Symbol	Parameter	Tests conditions		Min.	Typ.	Max.	Unit
I_R *	Reverse leakage current	Tj = 25°C	$V_R = V_{RRM}$			4.5	µA
		Tj = 125°C			2	6	mA
V_F **	Forward voltage drop	Tj = 25°C	I_F = 8 A			0.71	V
		Tj = 25°C	I_F = 10 A			0.77	
		Tj = 25°C	I_F = 16 A			0.81	
		Tj = 25°C	I_F = 20 A			0.88	
		Tj = 125°C	I_F = 8 A		0.56	0.58	
		Tj = 125°C	I_F = 10 A		0.59	0.64	
		Tj = 125°C	I_F = 16 A		0.65	0.68	
		Tj = 125°C	I_F = 20 A		0.67	0.73	

Pulse test : * tp = 5 ms, δ < 2%
** tp = 380 µs, δ < 2%

To evaluate the maximum conduction losses use the following equation :
P = 0.55 x $I_{F(AV)}$ + 0.009 x $I_F^2{}_{(RMS)}$

Fig. 1: Average forward power dissipation versus average forward current (per diode).

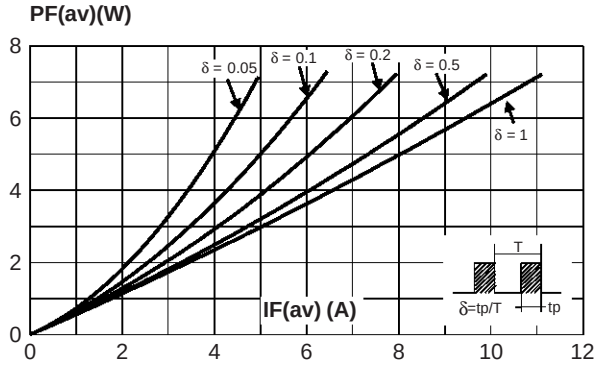

Fig. 2: Average forward current versus ambient temperature (δ=0.5, per diode).

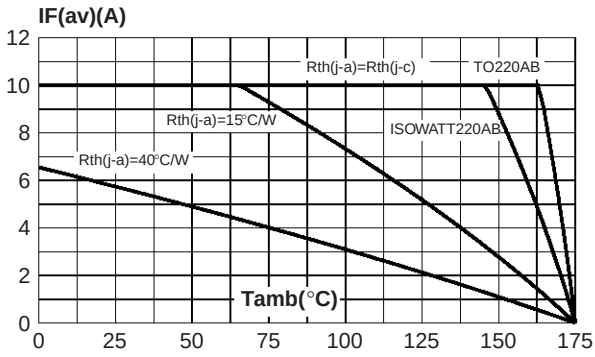

PACKAGE MECHANICAL DATA
I^2PAK

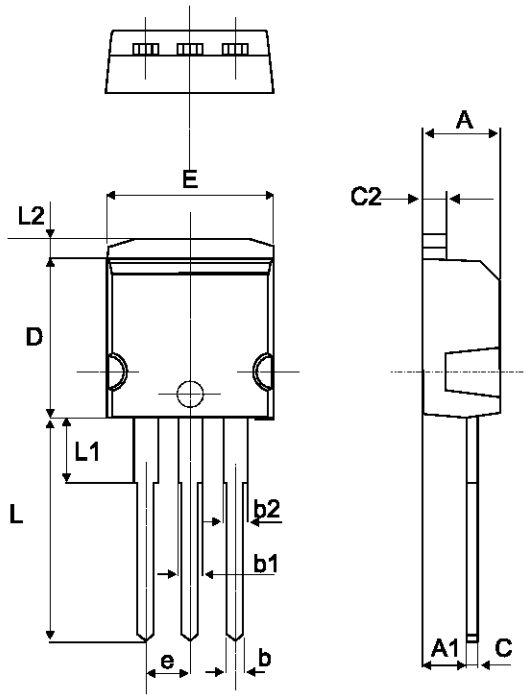

REF.	DIMENSIONS					
	Millimeters			Inches		
	Min.	Typ.	Max.	Min.	Typ.	Max.
A	4.30		4.60	0.169		0.181
A1	2.49		2.69	0.098		0.106
b	0.70		0.93	0.028		0.037
b1	1.20		1.38	0.047		0.054
b2	1.25	1.40		0.049	0.055	
C	0.45		0.60	0.018		0.024
C2	1.21		1.36	0.048		0.054
D	8.95		9.35	0.352		0.368
e	2.44		2.64	0.096		0.104
E	10.00		10.28	0.394		0.405
L	13.10		13.60	0.516		0.535
L1	3.48		3.78	0.137		0.149
L2	1.27		1.40	0.050		0.055

Ordering type	Marking	Package	Weight	Base qty	Delivery mode
STPS20H100CT	STPS20H100CT	TO-220AB	2.20g	50	Tube
STPS20H100CF	STPS20H100CF	ISOWATT220AB	2.08g	50	Tube
STPS20H100CG-1	STPS20H100CG	I^2PAK	1.49g	50	Tube
STPS20H100CG	STPS20H100CG	D^2PAK	1.48g	50	Tube
STPS20H100CG-TR	STPS20H100CG	D^2PAK	1.48g	1000	Tape & reel

- Epoxy meets UL94,V0