STPS20120C

POWER SCHOTTKY RECTIFIER

Table 1: Main Product Characteristics

$I_{F(AV)}$	2 x 10 A
V_{RRM}	120 V
T_j (max)	175°C
V_F (typ)	0.54 V

FEATURES AND BENEFITS

- High junction temperature capability
- Avalanche rated
- Low leakage current
- Good trade-off between leakage current and forward voltage drop

DESCRIPTION

Dual center tap Schottky rectifier suited for high frequency Switch Mode Power Supply.
Packaged in TO-220AB & I^2PAK, this device is intended to be used in notebook & LCD adaptors, desktop SMPS, providing in these applications a margin between the remaining voltages applied on the diode and the voltage capability of the diode.

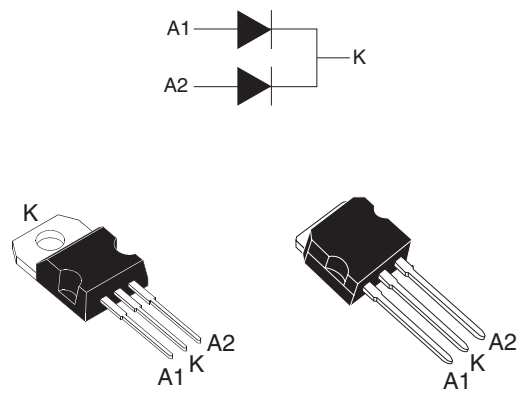

TO-220AB
STPS20120CT

I^2PAK
STPS20120CR

Table 2: Order Codes

Part Number	Marking
STPS20120CT	STPS20120CT
STPS20120CR	STPS20120CR

Table 3: Absolute Ratings (limiting values, per diode)

Symbol	Parameter			Value	Unit
V_{RRM}	Repetitive peak reverse voltage			120	V
$I_{F(RMS)}$	RMS forward voltage			30	A
$I_{F(AV)}$	Average forward current	$\delta = 0.5$ $T_c = 150°C$	Per diode Per device	10 20	A
I_{FSM}	Surge non repetitive forward current	t_p = 10ms sinusoidal		150	A
P_{ARM}	Repetitive peak avalanche power	$t_p = 1\mu s$ Tj = 25°C		4600	W
T_{stg}	Storage temperature range			-65 to + 175	°C
T_j	Maximum operating junction temperature *			175	°C

* : $\frac{dPtot}{dTj} > \frac{1}{Rth(j-a)}$ thermal runaway condition for a diode on its own heatsink

Table 4: Thermal Parameters

Symbol	Parameter		Value	Unit
$R_{th(j-c)}$	Junction to case	Per diode Total	3 1.8	°C/W
$R_{th(c)}$	Coupling	Total	0.6	°C/W

When the diodes 1 and 2 are used simultaneously:
T_j(diode 1) = P(diode 1) x $R_{th(j-c)}$(per diode) + P(diode 2) x $R_{th(c)}$

Table 5: Static Electrical Characteristics (per diode)

Symbol	Parameter	Tests conditions		Min.	Typ	Max.	Unit
I_R *	Reverse leakage current	T_j = 25°C	$V_R = V_{RRM}$			10	µA
		T_j = 125°C			1.5	5	mA
V_F **	Forward voltage drop	T_j = 25°C	I_F = 2.5A			0.7	V
		T_j = 125°C			0.54	0.58	
		T_j = 25°C	I_F = 10A			0.92	
		T_j = 125°C			0.7	0.74	
		T_j = 25°C	I_F = 20A			1.02	
		T_j = 125°C			0.81	0.86	

Pulse test: * tp = 5 ms, δ < 2%
** tp = 380 µs, δ < 2%

To evaluate the conduction losses use the following equation: P = 0.62 x $I_{F(AV)}$ + 0.012 I_F^2(RMS)

Figure 1: Average forward power dissipation versus average forward current (per diode)

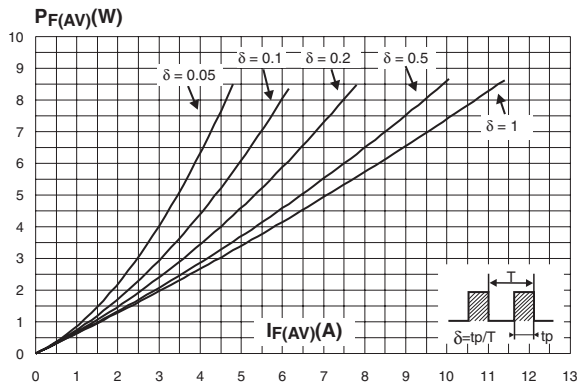

Figure 2: Average forward current versus ambient temperature (δ = 0.5, per diode)

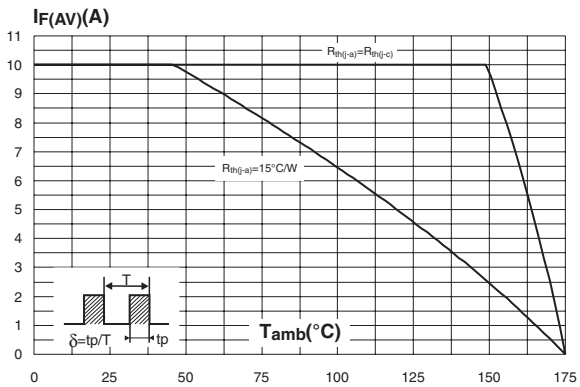

Figure 11: I²PAK Package Mechanical Data

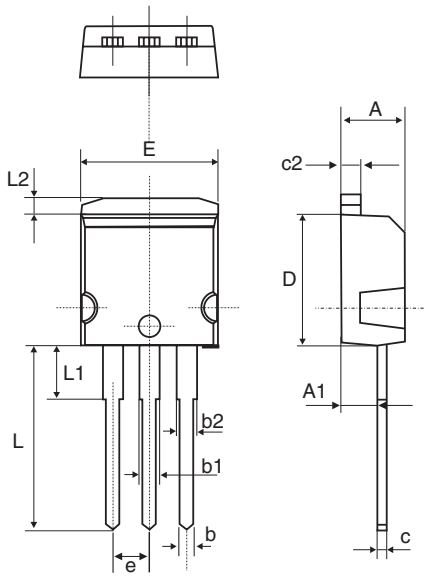

REF.	DIMENSIONS			
	Millimeters		Inches	
	Min.	Max.	Min.	Max.
A	4.40	4.60	0.173	0.181
A1	2.49	2.69	0.098	0.106
b	0.70	0.93	0.028	0.037
b1	1.14	1.70	0.044	0.067
b2	1.14	1.70	0.044	0.067
c	0.45	0.60	0.018	0.024
c2	1.23	1.36	0.048	0.054
D	8.95	9.35	0.352	0.368
e	2.40	2.70	0.094	0.106
E	10.0	10.4	0.394	0.409
L	13.1	13.6	0.516	0.535
L1	3.48	3.78	0.137	0.149
L2	1.27	1.40	0.050	0.055

Table 6: Ordering Information

Ordering type	Marking	Package	Weight	Base qty	Delivery mode
STPS20120CT	STPS20120CT	TO-220AB	2.23 g	50	Tube
STPS20120CR	STPS20120CR	I²PAK	1.49 g	50	Tube

- Epoxy meets UL94, V0
- Cooling method: by conduction (C)
- Recommended torque value: 0.8 m.N.
- Maximum torque value: 1.0 m.N.