STPS10L45CT/CG/CF/CFP

LOW DROP POWER SCHOTTKY RECTIFIER

MAIN PRODUCTS CHARACTERISTICS

$I_{F(AV)}$	2x5 A
V_{RRM}	45 V
Tj (max)	150°C
V_F (max)	0.46 V

FEATURES AND BENEFITS

- LOW FORWARD VOLTAGE DROP MEANING VERY SMALL CONDUCTION LOSSES
- LOW SWITCHING LOSSES ALLOWING HIGH FREQUENCY OPERATION
- INSULATED PACKAGE: ISOWATT220AB, TO-220FPAB
  Insulating voltage = 2000V DC
  Capacitance = 12pF
- AVALANCHE CAPABILITY SPECIFIED

DESCRIPTION

Dual center tap Schottky rectifiers suited for Switched Mode Power Supplies and high frequency DC to DC converters.

Packaged in TO-220AB, ISOWATT220AB, TO-220FPAB and D^2PAK, these devices are intended for use in low voltage, high frequency inverters, free-wheeling and polarity protection applications.

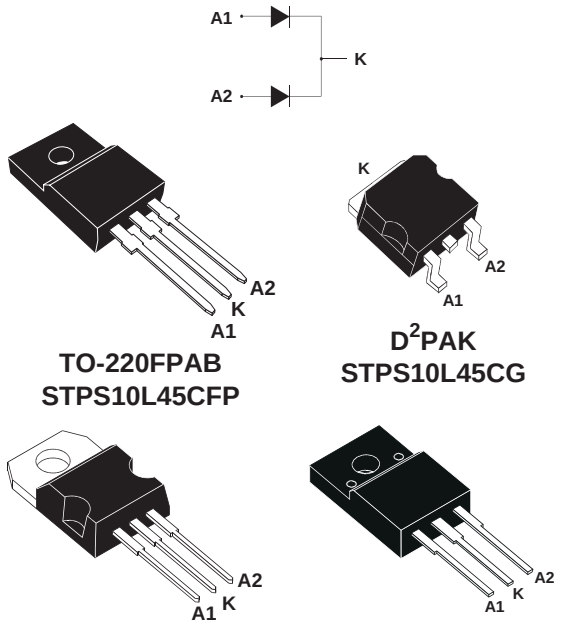

ABSOLUTE RATINGS (limiting values, per diode)

Symbol	Parameter				Value	Unit
V_{RRM}	Repetitive peak reverse voltage				45	V
$I_{F(RMS)}$	RMS forward current				20	A
$I_{F(AV)}$	Average forward current	TO-220AB D^2PAK	Tc =135°C δ = 0.5	Per diode Per device	5 10	A
		ISOWATT220AB TO-220FPAB	Tc =115°C δ = 0.5	Per diode Per device	5 10	A
I_{FSM}	Surge non repetitive forward current		tp = 10 ms Sinusoidal		150	A
I_{RRM}	Repetitive peak reverse current		tp = 2 µs square F=1kHz		1	A
I_{RSM}	Non repetitive peak reverse current		tp = 100 µs square		2	A
P_{ARM}	Repetitive peak avalanche power		tp = 1µs Tj = 25°C		2700	W
T_{stg}	Storage temperature range				- 65 to + 150	°C
Tj	Maximum operating junction temperature *				150	°C
dV/dt	Critical rate of rise of reverse voltage				10000	V/µs

$* : \frac{dPtot}{dTj} < \frac{1}{Rth(j-a)}$ thermal runaway condition for a diode on its own heatsink

THERMAL RESISTANCES

Symbol	Parameter			Value	Unit
$R_{th\ (j-c)}$	Junction to case	TO-220AB D^2PAK	Per diode Total	3 1.7	°C/W
$R_{th\ (c)}$			Coupling	0.35	
$R_{th\ (j-c)}$	Junction to case	ISOWATT220AB TO-220FPAB	Per diode Total	5 3.8	°C/W
$R_{th\ (c)}$			Coupling	2.5	

When the diodes 1 and 2 are used simultaneously :
Δ Tj(diode 1) = P(diode1) x $R_{th(j-c)}$(Per diode) + P(diode 2) x $R_{th(c)}$

STATIC ELECTRICAL CHARACTERISTICS (per diode)

Symbol	Parameter	Tests Conditions		Min.	Typ.	Max.	Unit
I_R *	Reverse leakage current	Tj = 25°C	$V_R = V_{RRM}$			0.15	mA
		Tj = 125°C			45	90	mA
V_F *	Forward voltage drop	Tj = 25°C	I_F = 5 A			0.53	V
		Tj = 125°C	I_F = 5 A		0.36	0.46	
		Tj = 25°C	I_F = 10 A			0.67	
		Tj = 125°C	I_F = 10 A		0.49	0.59	

Pulse test : * tp = 380 µs, δ < 2%

To evaluate the conduction losses use the following equation :
$P = 0.33 \times I_{F(AV)} + 0.026\ I_F^2{}_{(RMS)}$

Fig. 1: Average forward power dissipation versus average forward current (per diode).

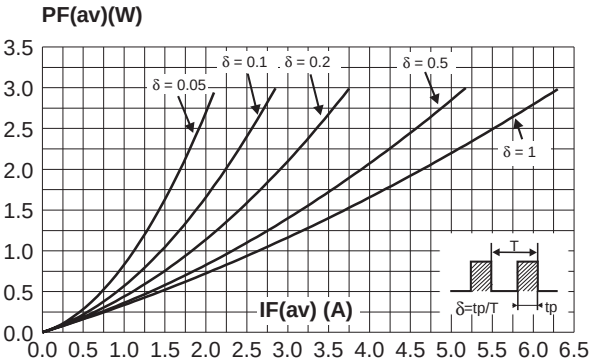

Fig. 2: Average forward current versus ambient temperature (δ=0.5, per diode).

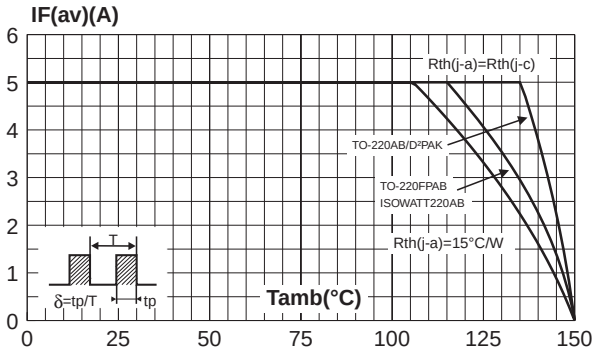

PACKAGE MECHANICAL DATA
ISOWATT220AB

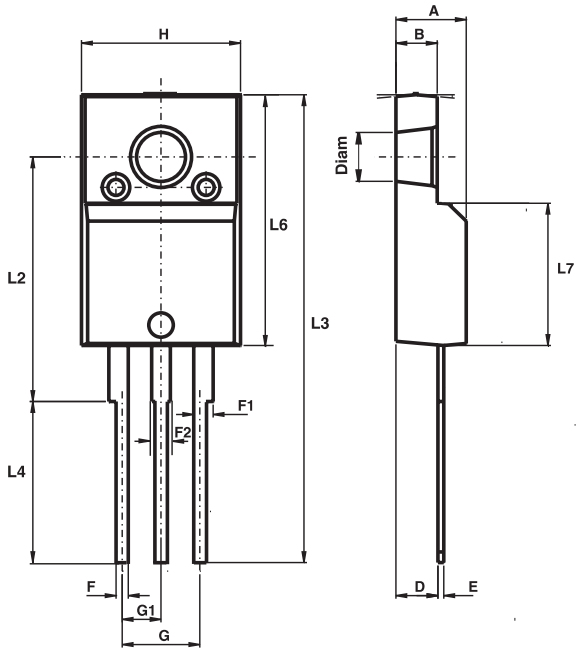

REF.	DIMENSIONS			
	Millimeters		Inches	
	Min.	Max.	Min.	Max.
A	4.40	4.60	0.173	0.181
B	2.50	2.70	0.098	0.106
D	2.50	2.75	0.098	0.108
E	0.40	0.70	0.016	0.028
F	0.75	1.00	0.030	0.039
F1	1.15	1.70	0.045	0.067
F2	1.15	1.70	0.045	0.067
G	4.95	5.20	0.195	0.205
G1	2.40	2.70	0.094	0.106
H	10.00	10.40	0.394	0.409
L2	16.00 typ.		0.630 typ.	
L3	28.60	30.60	1.125	1.205
L4	9.80	10.60	0.386	0.417
L6	15.90	16.40	0.626	0.646
L7	9.00	9.30	0.354	0.366
Diam	3.00	3.20	0.118	0.126

Ordering type	Marking	Package	Weight	Base qty	Delivery mode
STPS10L45CT	STPS10L45CT	TO-220AB	2.23g	50	Tube
STPS10L45CFP	STPS10L45CFP	TO-220FPAB	2 g	50	Tube
STPS10L45CG	STPS10L45CG	D²PAK	1.48g	50	Tube
STPS10L45CG-TR	STPS10L45CG	D²PAK	1.48g	1000	Tape & reel
STPS10L45CF	STPS10L45CF	ISOWATT220AB	2.08g	50	Tube

- Cooling method : by conduction (C)
- Recommended torque value : 0.55 N.m.
- Maximum torque value : 0.70 N.m.
- Epoxy meets UL94,V0