FERD30M45C

Field effect rectifier

Datasheet - production data

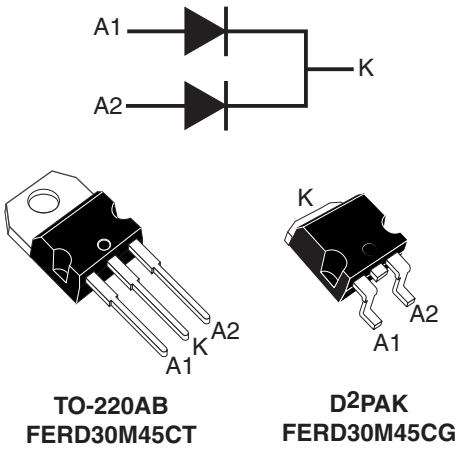

TO-220AB
FERD30M45CT

D2PAK
FERD30M45CG

Description

This dual center tap field effect rectifier provides stable leakage current over the full range of reverse voltage and low forward voltage drop.

Packaged in TO-220AB or D^2PAK, this device is intended to be used in solar bypass junction boxes and in switch mode power supplies.

Table 1. Device summary

Symbol	Value
$I_{F(AV)}$	2 x 15 A
V_{RRM}	45 V
$T_{j\ (max)}$	+175 °C up to 200 °C forward mode
V_F(typ)	0.35 V

Features

- Advanced rectifier proprietary process
- Stable leakage current over reverse voltage
- Low forward voltage drop
- High frequency operation

1 Characteristics

Table 2. Absolute ratings (limiting values, per diode, at 25 °C, unless otherwise specified)

Symbol	Parameter			Value	Unit
V_{RRM}	Repetitive peak reverse voltage			45	V
$I_{F(RMS)}$	Forward rms current			30	A
$I_{F(AV)}$	Average forward current, $\delta = 0.5$	T_c = 155 °C	Per diode	15	A
		T_c = 155 °C	Per device	30	
I_{FSM}	Surge non repetitive forward current	t_p = 10 ms sinusoidal		250	A
T_{stg}	Storage temperature range			-65 to + 175	°C
T_j	Maximum operating junction temperature			175	°C
T_j	Maximum operating temperature (DC forward current without reverse bias, t = 1 hour)(1)			200	°C

1. $\frac{dPtot}{dTj} < \frac{1}{Rth(j-a)}$ condition to avoid thermal runaway for a diode on its own heatsink.

Table 3. Thermal resistance

Symbol	Parameter		Value (max)	Unit
$R_{th(j-c)}$	Junction to case	Per diode	1.6	°C/W
		Total	1.05	
$R_{th(c)}$	Coupling		0.5	

When diodes 1 and 2 are used simultaneously:

T_j(diode 1) = P(diode1) x $R_{th(j-c)}$(per diode) + P(diode2) x R_{th}(c)

Table 4. Static electrical characteristics (per diode)

Symbol	Parameter	Test conditions		Min.	Typ.	Max.	Unit
I_R(1)	Reverse leakage current	T_j = 25 °C	$V_R = V_{RRM}$			600	µA
		T_j = 125 °C			25	50	mA
V_F(2)	Forward voltage drop	T_j = 125 °C	I_F = 7.5 A		0.305	0.350	V
		T_j = 125 °C	I_F = 10 A		0.350	0.395	
		T_j = 25 °C	I_F = 15 A		0.420	0.470	
		T_j = 125 °C			0.420	0.450	

1. Pulse test: t_p = 5 ms, δ < 2%
2. Pulse test: t_p = 380 µs, δ < 2%

To evaluate the conduction losses use the following equation:

$$P = 0.27 \times I_{F(AV)} + 0.012\ I_{F(RMS)}^2$$

Figure 1. Average forward power dissipation versus average forward current (per diode)

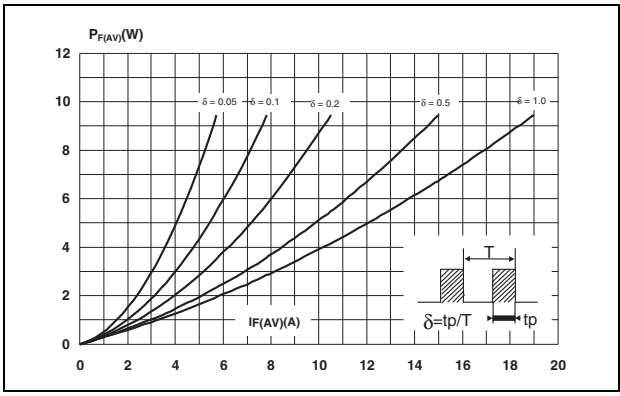

Figure 2. Average forward current versus ambient temperature (δ = 0.5, per diode)

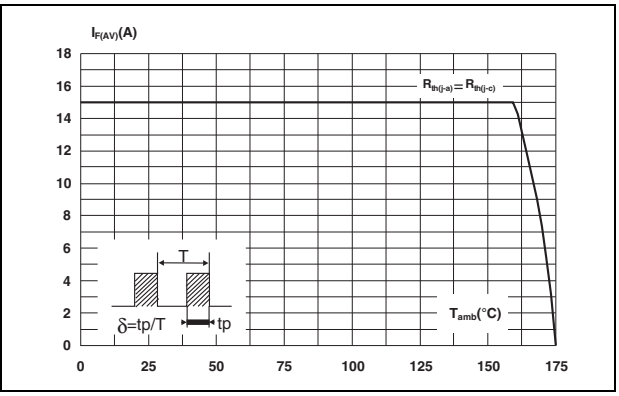

Figure 3. Junction capacitance versus reverse voltage applied (typical values, per diode)

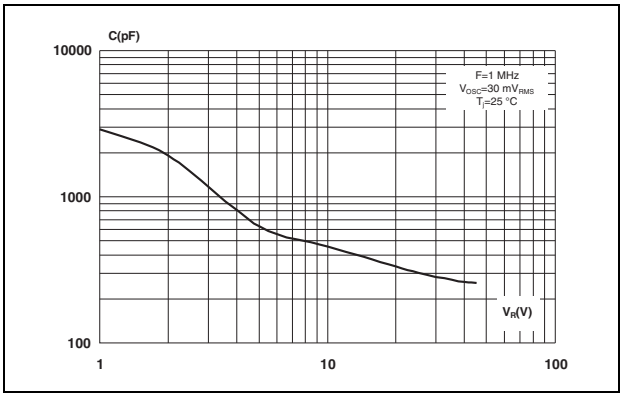

Figure 4. Forward voltage drop versus forward current (per diode)

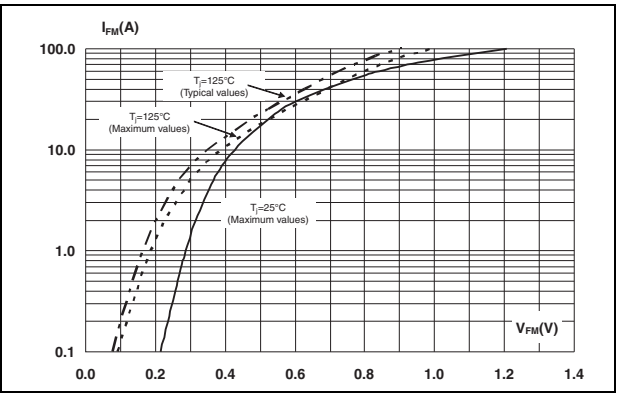

3 Ordering information

Table 7. Ordering information

Order code	Marking	Package	Weight	Base qty	Delivery mode
FERD30M45CT	FERD30M45CT	TO-220AB	2.2 g	50	Tube
FERD30M45CG-TR	FERD30M45CG	D^2PAK	1.5 g	1000	Tape and reel