# STTH602C

Ultrafast recovery diode

## Main product characteristics

| | |
|---|---|
| $I_{F(AV)}$ | 2 x 3 A |
| $V_{RRM}$ | 200 V |
| $T_j$ (max) | 175° C |
| $V_F$ (typ) | 0.80 V |
| $t_{rr}$ (typ) | 14 ns |

## Features and benefits

- Suited for SMPS
- Low losses
- Low forward and reverse recovery time
- High surge current capability
- High junction temperature
- insulated package: TO-220FPAB

## Description

Dual center tap diode suited for switch mode power supplies and high frequency DC to DC converters.

Packaged in TO-220AB and TO-22FPAB, this device is intended for use in low voltage high frequency inverters, free wheeling and polarity protection.

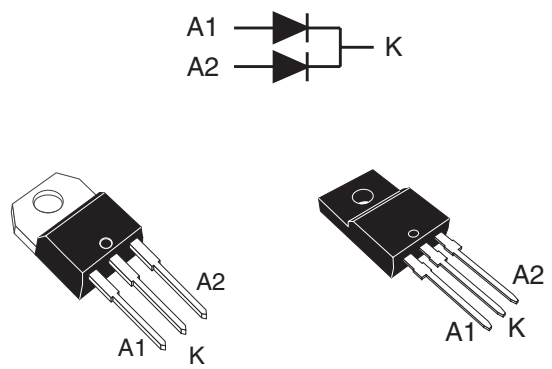


TO-220AB
STTH602CT

TO-220FPAB
STTH602CFP

## Order codes

| Part Number | Marking |
|---|---|
| STTH602CT | STTH602C |
| STTH602CFP | STTH602C |

# 1 Characteristics

**Table 1. Absolute ratings (limiting values at $T_j$ = 25° C, unless otherwise specified)**

| Symbol | Parameter | | | Value | Unit |
|---|---|---|---|---|---|
| $V_{RRM}$ | Repetitive peak reverse voltage | | | 200 | V |
| $I_{F(RMS)}$ | RMS forward current | | | 22 | A |
| $I_{F(AV)}$ | Average forward current, $\delta$ = 0.5 | TO-220AB | Per diode $T_c$ = 160° C | 3 | A |
| | | | Per device $T_c$ = 155° C | 6 | |
| | | TO-220FPAB | Per diode $T_c$ = 150° C | 3 | A |
| | | | Per device $T_c$ = 140° C | 6 | |
| $I_{FSM}$ | Surge non repetitive forward current | $t_p$ = 10 ms Sinusoidal | | 60 | A |
| $T_{stg}$ | Storage temperature range | | | -65 to + 175 | ° C |
| $T_j$ | Maximum operating junction temperature | | | 175 | ° C |

**Table 2. Thermal parameters**

| Symbol | Parameter | | | Value | Unit |
|---|---|---|---|---|---|
| $R_{th(j-c)}$ | Junction to case | TO-220AB | Per diode | 5 | ° C/W |
| | | | Per device | 3.0 | |
| | | TO-220FPAB | Per diode | 7.5 | |
| | | | Per device | 5.25 | |
| $R_{th(c)}$ | Coupling | TO-220AB | Per diode | 1 | |
| | | TO-220FPAB | Per diode | 3 | |

When the two diodes 1 and 2 are used simultaneously:

$\Delta$Tj(diode 1) = P (diode 1) X $R_{th(j-c)}$ (Per diode) + P (diode 2) x $R_{th(c)}$

**Table 3. Static electrical characteristics**

| Symbol | Parameter | Test conditions | | Typ | Max. | Unit |
|---|---|---|---|---|---|---|
| $I_R$(1) | Reverse leakage current | $T_j$ = 25° C | $V_R = V_{RRM}$ | | 3 | µA |
| | | $T_j$ = 125° C | | 3 | 30 | |
| $V_F$(2) | Forward voltage drop | $T_j$ = 25° C | $I_F$ = 3 A | 0.98 | 1.1 | V |
| | | $T_j$ = 150° C | | 0.8 | 0.95 | |
| | | $T_j$ = 25° C | $I_F$ = 6 A | 1.1 | 1.25 | |
| | | $T_j$ = 150° C | | 0.9 | 1.05 | |

1. Pulse test: $t_p$ = 5 ms, $\delta$ < 2 %
2. Pulse test: $t_p$ = 380 µs, $\delta$ < 2 %

To evaluate the conduction losses use the following equation:
$P = 0.85 \times I_{F(AV)} + 0.033\ I_F^2{}_{(RMS)}$

**Table 4. Dynamic characteristics**

| Symbol | Parameter | Test conditions | Min. | Typ | Max. | Unit |
|---|---|---|---|---|---|---|
| $t_{rr}$ | Reverse recovery time | $I_F$ = 1 A, $dI_F/dt$ = -100 A/µs, $V_R$ = 30 V, $T_j$ = 25 °C | | 14 | 20 | ns |
| | | $I_F$ = 1 A, $dI_F/dt$ = -50 A/µs, $V_R$ = 30 V, $T_j$ = 25 °C | | 21 | 30 | |
| $I_{RM}$ | Reverse recovery current | $I_F$ = 3 A, $dI_F/dt$ = 200 A/µs, $V_R$ = 160 V, $T_j$ = 125 °C | | 4 | 5.5 | A |
| $t_{fr}$ | Forward recovery time | $I_F$ = 3 A, $dI_F/dt$ = 200 A/µs $V_{FR}$ = 1.1 x $V_{Fmax}$, $T_j$ = 25 °C | | 24 | | ns |
| $V_{FP}$ | Forward recovery voltage | $I_F$ = 3 A, $dI_F/dt$ = 200 A/µs, $T_j$ = 25 °C | | 3.7 | | V |

**Figure 1. Peak current versus duty cycle (per diode)**

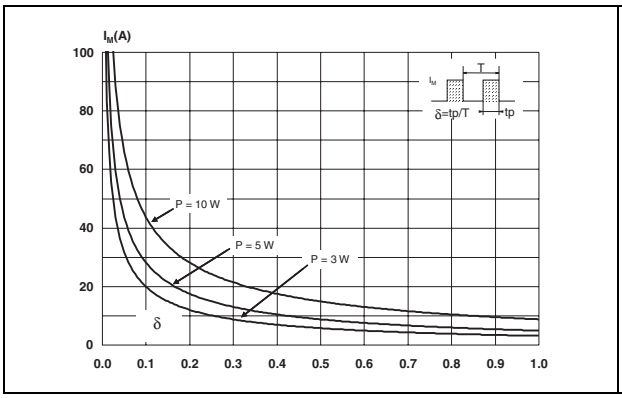


**Figure 2. Forward voltage drop versus forward current (typical values per diode)**

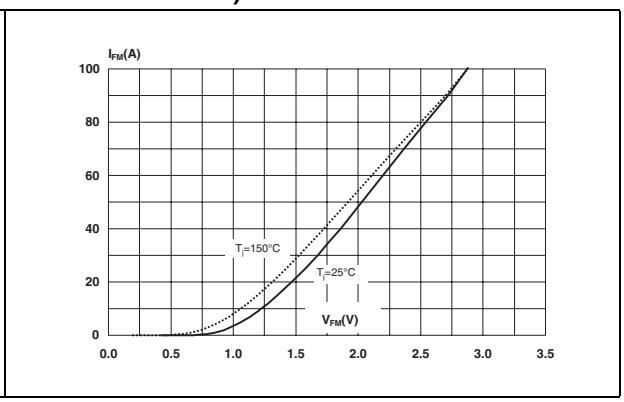


**Figure 3. Forward voltage drop versus forward current (maximum values per diode)**

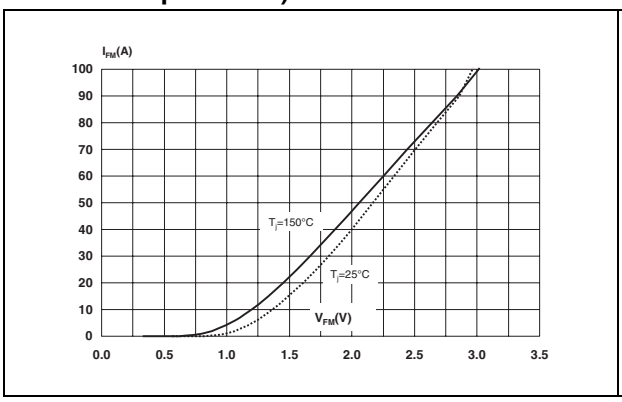


**Figure 4. Relative variation of thermal impedance junction to case versus pulse duration (T0-220AB)**