STPS8H100

High voltage power Schottky rectifier

Datasheet - production data

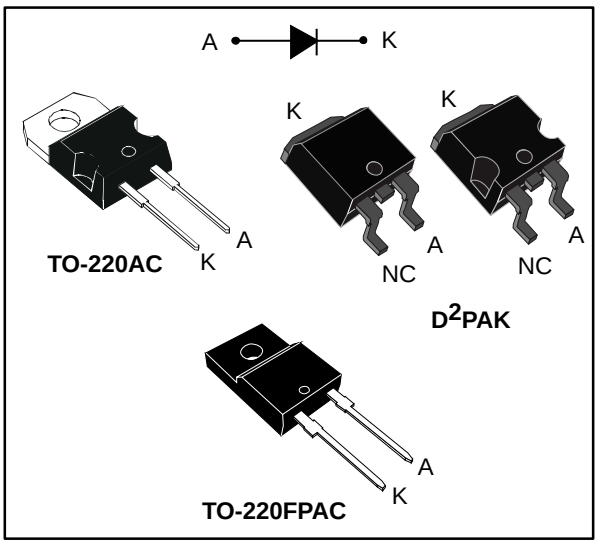

Features

- Negligible switching losses
- High junction temperature capability
- Low leakage current
- Good trade off between leakage current and forward voltage drop
- Insulated package:
  - TO-220FPAC, insulating voltage = 2000 V_{RMS} sine
- Avalanche capability specified
- ECOPACK®2 compliant component for D²PAK on demand

Description

Schottky barrier rectifier designed for high frequency compact switched mode power supplies such as adaptors and on-board DC-DC converters.

Table 1: Device summary

Symbol	Value
$I_{F(AV)}$	8 A
V_{RRM}	100 V
T_j (max)	175 °C
V_F (typ)	0.56 V

1 Characteristics

Table 2: Absolute ratings (limiting values, at 25 °C, unless otherwise specified)

Symbol	Parameter			Value	Unit
V_{RRM}	Repetitive peak reverse voltage			100	V
$I_{F(RMS)}$	Forward rms current			30	A
$I_{F(AV)}$	Average forward current δ = 0.5, square wave	TO-220AC, D^2PAK	T_C = 165 °C	8	A
		TO-220FPAC	T_C = 150 °C		
I_{FSM}	Surge non repetitive forward current	tp = 10 ms sinusoidal		250	A
P_{ARM}	Repetitive peak avalanche power	tp = 10 µs, T_j= 125 °C		750	W
T_{stg}	Storage temperature range			-65 to + 175	°C
T_j	Maximum operating junction temperature (1)			+ 175	°C

Notes:

(1)$(dP_{tot}/dT_j) < (1/R_{th(j-a)})$ condition to avoid thermal runaway for a diode on its own heatsink.

Table 3: Thermal parameter

Symbol	Parameter		Value	Unit
$R_{th(j-c)}$	Junction to case	TO-220AC, D^2PAK	1.6	°C/W
		TO-220FPAC	4	

Table 4: Static electrical characteristics

Symbol	Parameter	Test conditions		Min.	Typ.	Max.	Unit
I_R(1)	Reverse leakage current	T_j = 25 °C	$V_R = V_{RRM}$	-		4.5	µA
		T_j = 125 °C		-	2.0	6.0	mA
V_F(2)	Forward voltage drop	T_j = 25 °C	I_F = 8 A	-		0.71	V
		T_j = 125 °C		-	0.56	0.58	
		T_j = 25 °C	I_F = 10 A	-		0.77	
		T_j = 125 °C		-	0.59	0.64	
		T_j = 25 °C	I_F = 16 A	-		0.81	
		T_j = 125 °C		-	0.65	0.68	

Notes:

(1)Pulse test: t_p = 5 ms, δ < 2%

(2)Pulse test: t_p = 380 µs, δ < 2%

To evaluate the conduction losses use the following equation:

$P = 0.48 \times I_{F(AV)} + 0.0125\ I_{F}^2{}_{(RMS)}$

1.1 Characteristics (curves)

Figure 1: Average forward power dissipation versus average forward current

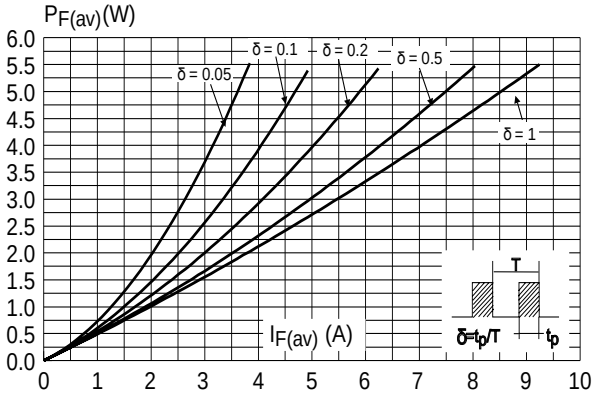

Figure 2: Normalized avalanche power derating versus pulse duration (Tj= 125 °C)

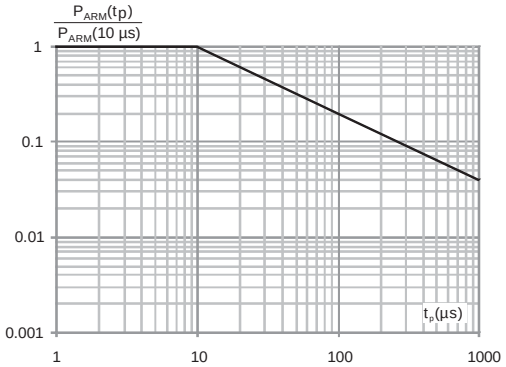

Figure 3: Average forward current versus ambient temperature, δ = 0.5 (TO-220AC, D²PAK)

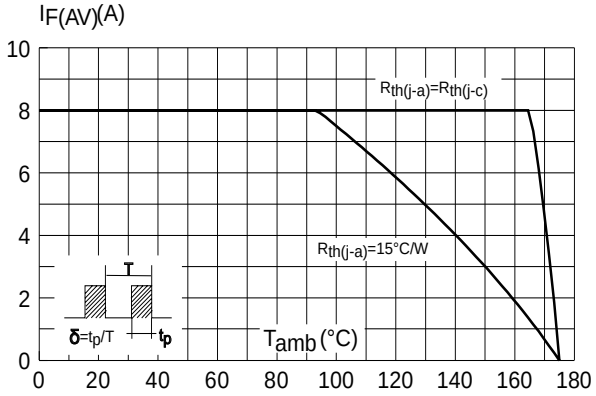

Figure 4: Average forward current versus ambient temperature, δ = 0.5 (TO-220FPAC)

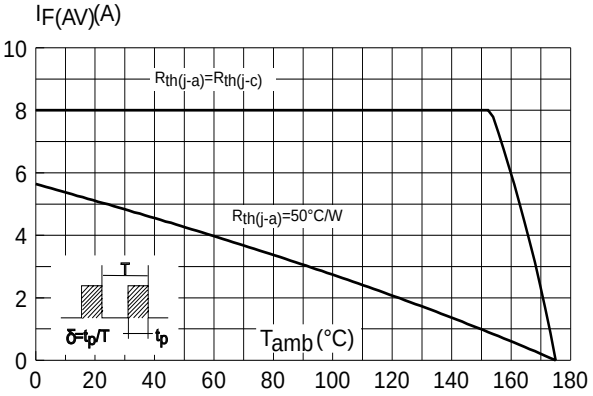

Figure 5: Relative variation of thermal impedance junction to case versus pulse duration (TO-220AC, D²PAK)

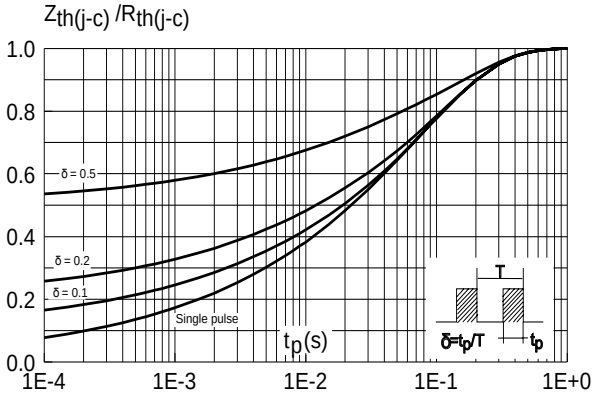

Figure 6: Relative variation of thermal impedance junction to case versus pulse duration (TO-220FPAC)