NCP1377, NCP1377B

PWM Current-Mode Controller for Free-Running Quasi-Resonant Operation

The NCP1377 combines a true current mode modulator and a demagnetization detector which ensures full borderline/critical Conduction Mode in any load/line conditions together with minimum drain voltage switching (Quasi−Resonant operation). Due to its inherent skip cycle capability, the controller enters burst mode as soon as the power demand falls below a predetermined level. As this happens at low peak current, no audible noise can be heard. For NCP1377, an internal 8.0 μs timer prevents the free−run frequency to exceed 100 kHz (therefore below the 150 kHz CISPR−22 EMI starting limit), while the skip adjustment capability lets the user select the frequency at which the burst foldback takes place. For NC1377B, the internal timer duration is reduced to 3.0 μs to allow operation at higher frequencies (up to 300 kHz).

The transformer core reset detection is done through an auxiliary winding which, brought via a dedicated pin, also enables fast Over Voltage Protection (OVP). Once an OVP has been detected, the IC permanently latches off. The 1377 features a sampling time of 4.5 μs whereas it is 1.5 μs for the B version.

The NCP1377 also features an efficient protective circuitries which, in presence of an overcurrent condition, disables the output pulses and enters a safe burst mode, trying to restart. Once the default has gone, the device auto−recovers. Finally an internal 1.0 ms Soft−Start eliminates the traditional startup stress.

Features

- Free−Running Borderline/Critical Mode Quasi−Resonant Operation
- Latched Overvoltage Protection
- Auto−Recovery Short−Circuit Protection Via UVLO Crossover
- External Latch Triggering, e.g. Via Overtemperature Signal
- Current−Mode with Adjustable Skip Cycle Capability
- Internal 1.0 ms Soft−Start
- Internal Temperature Shutdown
- Internal Leading Edge Blanking
- 500 mA Peak Current Source/Sink Capability
- Under Voltage Lockout Level of 12.5 V (On) and 7.5 V (Min)
- Direct Optocoupler Connection
- SPICE Models Available for TRANsient Analysis
- Internal Minimum T_{OFF}
- These Devices are Pb−Free, Halogen Free/BFR Free and are RoHS Compliant

Typical Applications

- AC−DC Adapters for Notebooks, etc.
- Offline Battery Chargers
- Consumer Electronics (DVD Players, Set−Top Boxes, TVs, etc.)
- Auxiliary Power Supplies (USB, Appliances, TVs, etc.)

MARKING DIAGRAMS

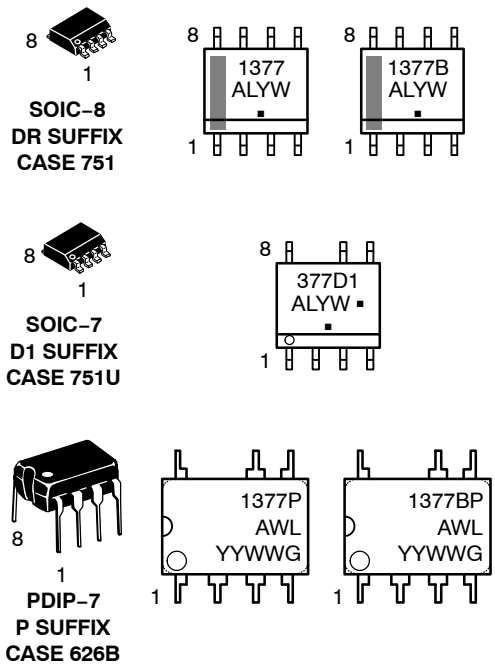

A = Assembly Location
L, WL = Wafer Lot
Y, YY = Year
W, WW = Work Week
▪ or G = Pb−Free Package
(Note: Microdot may be in either location)

PIN CONNECTIONS

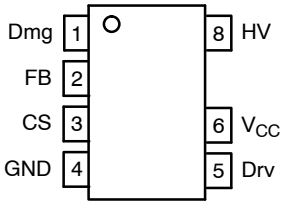

(Top View)

ORDERING INFORMATION

See detailed ordering and shipping information in the package dimensions section on page 14 of this data sheet.

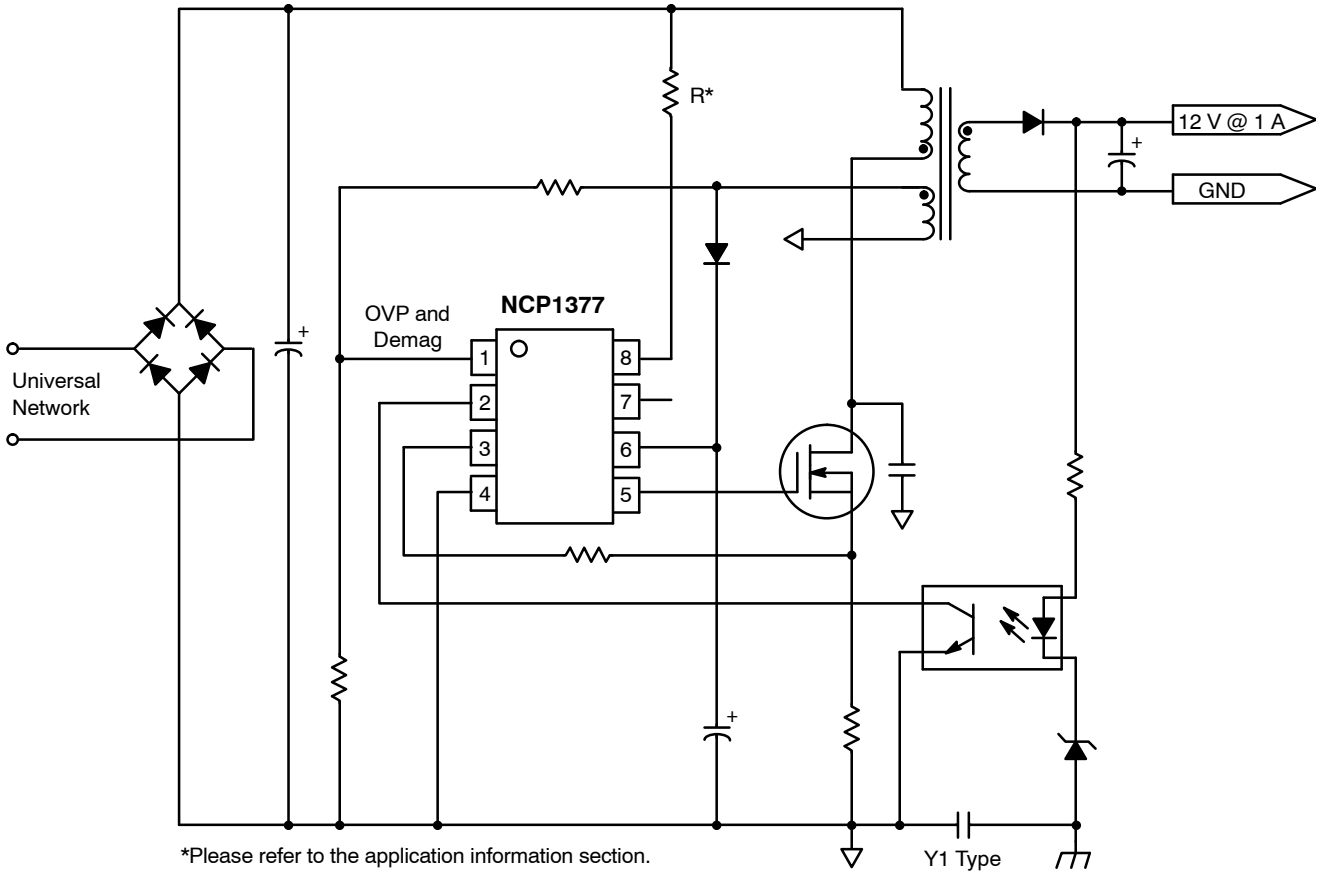

Figure 1. Typical Application Schematic

PIN FUNCTION DESCRIPTION

Pin	Symbol	Function	Description
1	Demag	Core reset detection and OVP	The auxiliary FLYBACK signal ensures discontinuous operation and offers a fixed overvoltage detection level of 7.2 V.
2	FB	Sets the peak current setpoint	By connecting an optocoupler to this pin, the peak current setpoint is adjusted accordingly to the output power demand. By bringing this pin below the internal skip level, you shut off the device.
3	CS	Current sense input and skip cycle level selection	This pin senses the primary current and routes it to the internal comparator via an L.E.B. By inserting a resistor in series with the pin, you control the level at which the skip operation takes place.
4	GND	The IC ground	–
5	Drv	Driving pulses	The driver's output to an external MOSFET.
6	V_{CC}	Supplies the IC	This pin is connected to an external bulk capacitor of typically 10 μF.
7	NC	–	This unconnected pin ensures adequate creepage distance.
8	HV	High−voltage pin	Connected to the high−voltage rail, this pin injects a constant current into the V_{CC} bulk capacitor and ensures a clean lossless startup sequence.

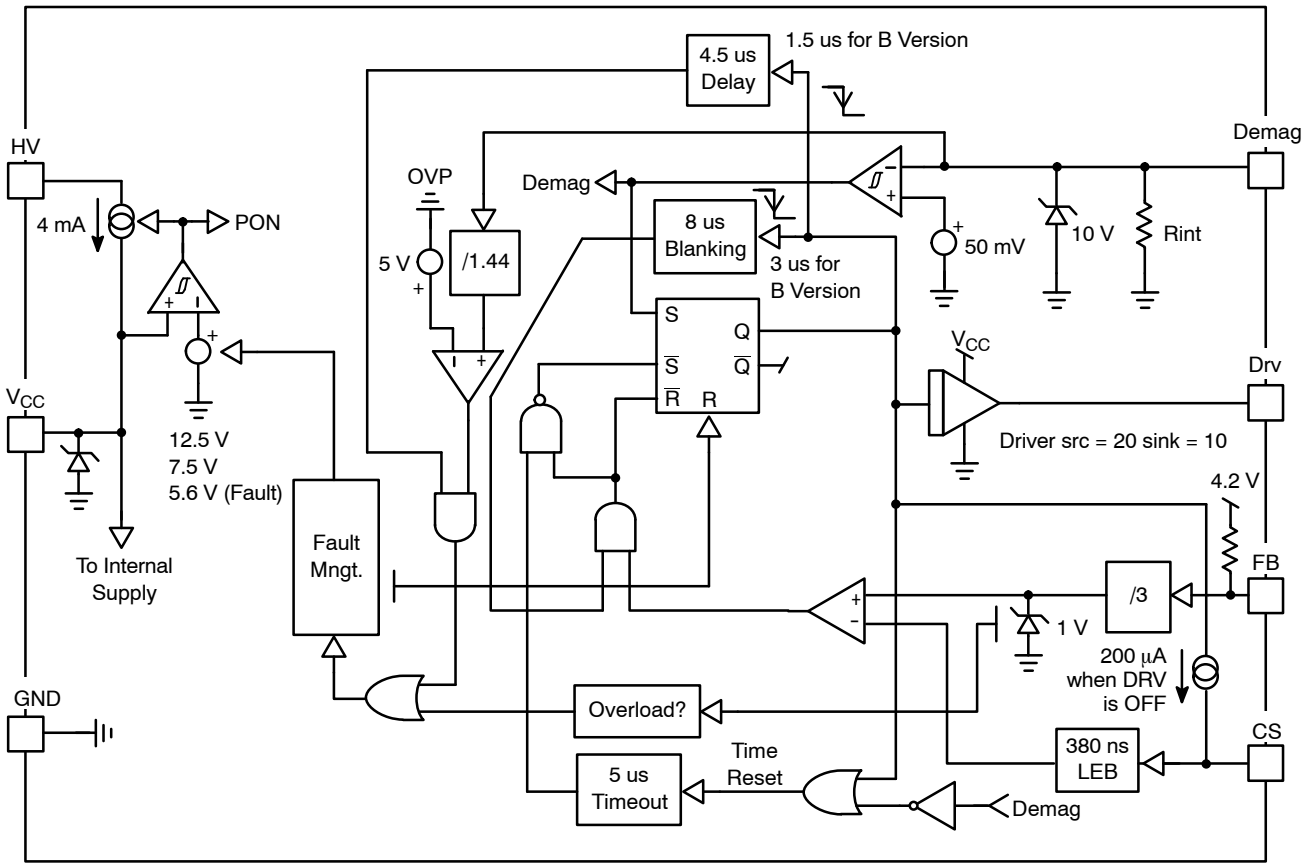

Figure 2. Internal Circuit Architecture

MAXIMUM RATINGS

Rating	Symbol	Value	Unit
Continuous Power Supply or Drive Voltage	V_{CC}, Drv	18	V
Transient Power Supply Voltage, Duration < 10 ms, I_{VCC} < 20 mA	V_{CC} Pulse	25	V
Maximum Voltage on all other pins except Pin 8 (HV), Pin 6 (V_{CC}) and Pin 5 (Drv)	–	−0.3 to 10	V
Maximum Current into all pins except V_{CC} (6), HV (8) and Demag (1) when 10 V ESD diodes are activated	–	5.0	mA
Maximum Current in Pin 1	Idem	+3.0/−2.0	mA
Thermal Resistance, Junction−to−Case	$R_{\theta JC}$	57	°C/W
Thermal Resistance, Junction−to−Air, SOIC Version	$R_{\theta JA}$	178	°C/W
Thermal Resistance, Junction−to−Air, PDIP Version	$R_{\theta JA}$	100	°C/W
Maximum Junction Temperature	TJ_{MAX}	150	°C
Temperature Shutdown	–	155	°C
Hysteresis in Shutdown	–	30	°C
Storage Temperature Range	–	−60 to +150	°C
ESD Capability, HBM Model (All pins except V_{CC} and HV)	–	2.0	kV
ESD Capability, Machine Model	–	200	V
Maximum Voltage on Pin 8 (HV), Pin 6 (V_{CC}) Decoupled to Ground with 10 μF	V_{HV}	500	V

Stresses exceeding Maximum Ratings may damage the device. Maximum Ratings are stress ratings only. Functional operation above the Recommended Operating Conditions is not implied. Extended exposure to stresses above the Recommended Operating Conditions may affect device reliability.

ELECTRICAL CHARACTERISTICS

(For typical values T_J = 25°C, for min/max values T_J = −40°C to +125°C, Max T_J = 150°C, V_{CC} = 11 V unless otherwise noted.)

Characteristic	Pin	Symbol	Min	Typ	Max	Unit
SUPPLY SECTION						
V_{CC} Increasing Level at which the Current Source Turns−Off	6	VCC_{ON}	11.6	12.5	13.7	V
Minimum Operating Voltage after Turn−On	6	VCC_{OFF}	7.0	7.5	8.2	V
V_{CC} Decreasing Level at which the Latchoff Phase Ends	6	VCC_{latch}	–	5.6	–	V
Internal IC Consumption, No Output Load on Pin 5, F_{SW} = 60 kHz	6	ICC1	–	1.0	1.3 (Note 1)	mA
Internal IC Consumption, 1.0 nF Output Load on Pin 5, F_{SW} = 60 kHz	6	ICC2	–	1.6	2.0 (Note 1)	mA
Internal IC Consumption, Latchoff Phase, V_{CC} = 6.0 V	6	ICC3	–	220	–	μA
INTERNAL STARTUP CURRENT SOURCE						
High−Voltage Current Source, V_{CC} = 10 V, V_{pin8} = 50 V	8	IC1	2.4	4.0	6.0	mA
High−Voltage Current Source, V_{CC} = 0 V, V_{pin8} = 50 V	8	IC2	–	4.5	–	mA
Startup Leakage, V_{pin8} = 500 V	8	I_{HVLeak}	–	30	70	μA
DRIVE OUTPUT						
Output Voltage Rise−Time @ CL = 1.0 nF, 10−90% of Output Signal	5	T_r	–	40	–	ns
Output Voltage Fall−Time @ CL = 1.0 nF, 10−90% of Output Signal	5	T_f	–	20	–	ns
Source Resistance	5	R_{OH}	12	20	36	Ω
Sink Resistance	5	R_{OL}	5.0	10	19	Ω
CURRENT COMPARATOR						
Input Bias Current @ 1.0 V Input Level on Pin 3	3	I_{IB}	–	0.02	–	μA
Maximum Internal Current Setpoint	3	I_{Limit}	0.9	1.0	1.1	V
Propagation Delay from Current Detection to Gate OFF State	3	T_{DEL}	–	100	160	ns
Leading Edge Blanking Duration	3	T_{LEB}	–	380	–	ns
Internal Current Offset Injected on the CS Pin During OFF Time	3	Iskip	–	200	–	μA
OVERVOLTAGE SECTION						
Sampling Delay After ON Time NCP1377 NCP1377B	1 1	T_{sample}	– –	4.5 1.5	– –	μs
OVP Internal Reference Level	1	V_{ref}	6.4	7.2	8.0	V
FEEDBACK SECTION						
Internal Pullup Resistor	2	Rup	–	20	–	kΩ
Pin 3 to Current Setpoint Division Ratio	–	Iratio	–	3.3	–	–
Internal Soft−Start	–	Tss	–	1.0	–	ms
DEMAGNETIZATION DETECTION BLOCK						
Input Threshold Voltage (Vpin 1 Decreasing)	1	V_{th}	35	50	90	mV
Hysteresis (Vpin 1 Decreasing)	1	V_H	–	20	–	mV
Input Clamp Voltage High State (Ipin 1 = 3.0 mA) Low State (Ipin 1 = −2.0 mA)	 1 1	 VC_H VC_L	 8.0 −0.9	 10 −0.7	 12 −0.5	V
Pin1 Internal Resistance	1	R_{int}	–	28	–	kΩ
Demag Propagation Delay	1	T_{dem}	–	210	–	ns
Timeout After Last Demag Transition	1	Tout	–	5.0	–	μs
Internal Input Capacitance at Vpin 1 = 1.0 V	1	C_{par}	–	10	–	pF
Minimum T_{OFF} (Internal Blanking Delay After T_{ON}) NCP1377 NCP1377B	1 1	T_{blank}	– –	8.0 3.0	– –	μs

1. Max value at T_j = −40°C, please see characterization curves.

TYPICAL CHARACTERISTICS

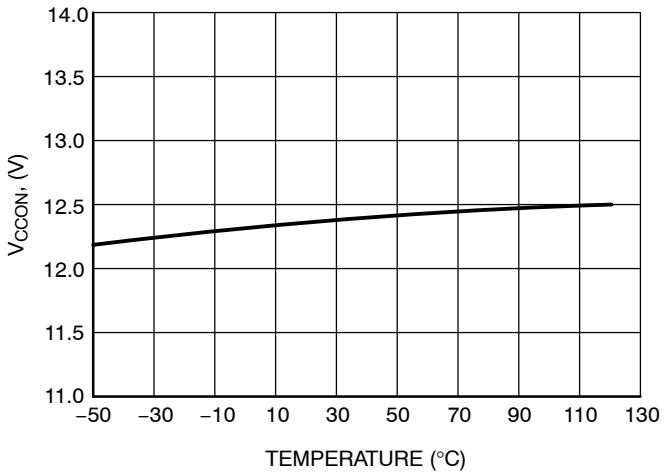

Figure 3. V_{CCON} Threshold versus Temperature

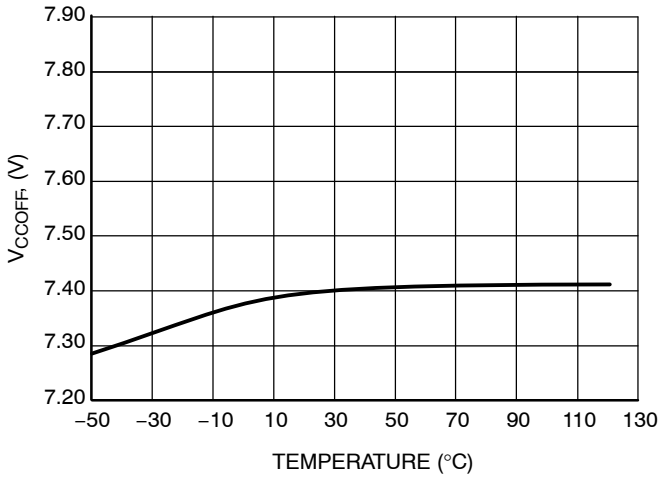

Figure 4. V_{CCOFF} Threshold versus Temperature

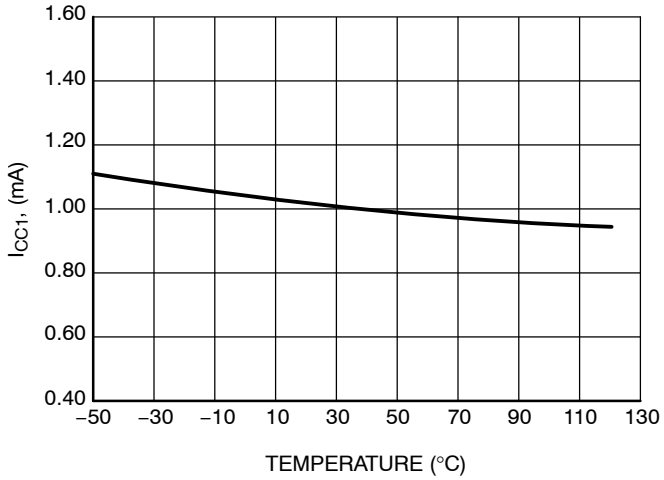

Figure 5. Current Consumption (No Load) versus Temperature

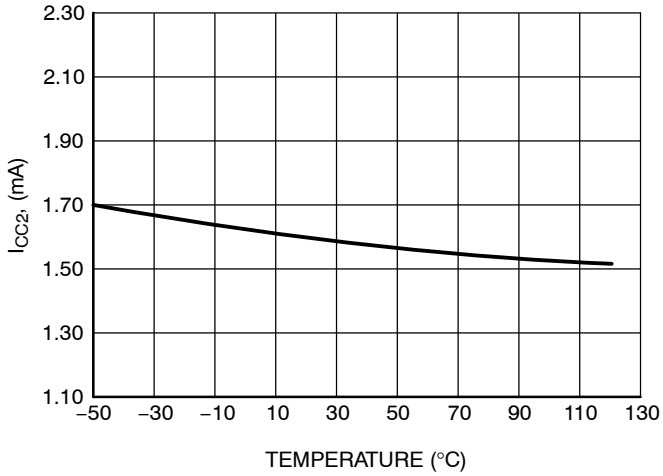

Figure 6. Current Consumption (1.0 nF Load) versus Temperature

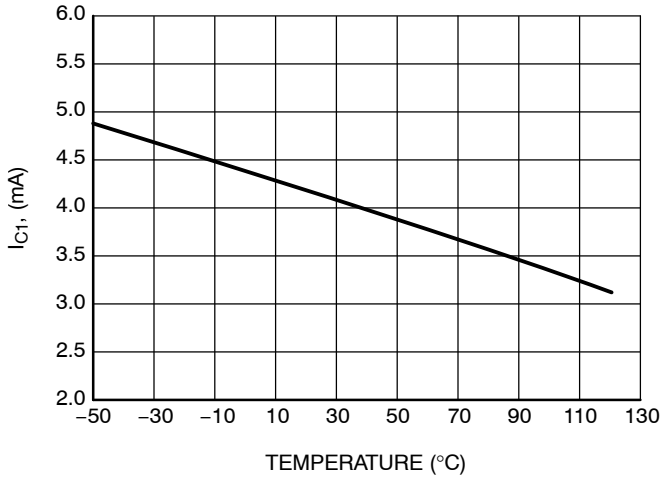

Figure 7. HV Current Source at V_{CC} = 10 V versus temperature

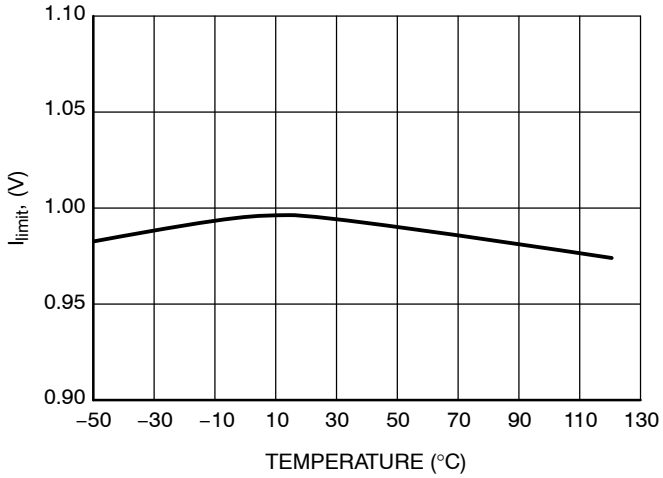

Figure 8. Maximum Current Setpoint versus Temperature