STM32F072x8 STM32F072xB

ARM®-based 32-bit MCU, up to 128 KB Flash, crystal-less USB FS 2.0, CAN, 12 timers, ADC, DAC & comm. interfaces, 2.0 - 3.6 V

Datasheet - production data

Features

- Core: ARM® 32-bit Cortex®-M0 CPU, frequency up to 48 MHz
- Memories
  - 64 to 128 Kbytes of Flash memory
  - 16 Kbytes of SRAM with HW parity
- CRC calculation unit
- Reset and power management
  - Digital and I/O supply: V_{DD} = 2.0 V to 3.6 V
  - Analog supply: V_{DDA} = V_{DD} to 3.6 V
  - Selected I/Os: V_{DDIO2} = 1.65 V to 3.6 V
  - Power-on/Power down reset (POR/PDR)
  - Programmable voltage detector (PVD)
  - Low power modes: Sleep, Stop, Standby
  - V_{BAT} supply for RTC and backup registers
- Clock management
  - 4 to 32 MHz crystal oscillator
  - 32 kHz oscillator for RTC with calibration
  - Internal 8 MHz RC with x6 PLL option
  - Internal 40 kHz RC oscillator
  - Internal 48 MHz oscillator with automatic trimming based on ext. synchronization
- Up to 87 fast I/Os
  - All mappable on external interrupt vectors
  - Up to 68 I/Os with 5V tolerant capability and 19 with independent supply V_{DDIO2}
- Seven-channel DMA controller
- One 12-bit, 1.0 µs ADC (up to 16 channels)
  - Conversion range: 0 to 3.6 V
  - Separate analog supply: 2.4 V to 3.6 V
- One 12-bit D/A converter (with 2 channels)
- Two fast low-power analog comparators with programmable input and output
- Up to 24 capacitive sensing channels for touchkey, linear and rotary touch sensors

LQFP100 14x14 mm
LQFP64 10x10 mm
LQFP48 7x7 mm

UFQFPN48
7x7 mm

UFBGA100
7x7 mm
UFBGA64
5x5 mm

WLCSP49
3.3x3.1 mm

- Calendar RTC with alarm and periodic wakeup from Stop/Standby
- 12 timers
  - One 16-bit advanced-control timer for six-channel PWM output
  - One 32-bit and seven 16-bit timers, with up to four IC/OC, OCN, usable for IR control decoding or DAC control
  - Independent and system watchdog timers
  - SysTick timer
- Communication interfaces
  - Two I^2C interfaces supporting Fast Mode Plus (1 Mbit/s) with 20 mA current sink, one supporting SMBus/PMBus and wakeup
  - Four USARTs supporting master synchronous SPI and modem control, two with ISO7816 interface, LIN, IrDA, auto baud rate detection and wakeup feature
  - Two SPIs (18 Mbit/s) with 4 to 16 programmable bit frames, and with I^2S interface multiplexed
  - CAN interface
  - USB 2.0 full-speed interface, able to run from internal 48 MHz oscillator and with BCD and LPM support
- HDMI CEC wakeup on header reception
- Serial wire debug (SWD)
- 96-bit unique ID
- All packages ECOPACK®2

Table 1. Device summary

Reference	Part number
STM32F072x8 STM32F072xB	STM32F072C8, STM32F072R8, STM32F072V8, STM32F072CB, STM32F072RB, STM32F072VB

6.2 Absolute maximum ratings

Table 21. Voltage characteristics(1)

Symbol	Ratings	Min	Max	Unit
$V_{DD}–V_{SS}$	External main supply voltage	- 0.3	4.0	V
$V_{DDIO2}–V_{SS}$	External I/O supply voltage	- 0.3	4.0	V
$V_{DDA}–V_{SS}$	External analog supply voltage	- 0.3	4.0	V
$V_{DD}–V_{DDA}$	Allowed voltage difference for $V_{DD} > V_{DDA}$	-	0.4	V
$V_{BAT}–V_{SS}$	External backup supply voltage	- 0.3	4.0	V
V_{IN}(2)	Input voltage on FT and FTf pins	V_{SS} - 0.3	V_{DDIOx} + 4.0(3)	V
	Input voltage on TTa pins	V_{SS} - 0.3	4.0	V
	BOOT0	0	9.0	V
	Input voltage on any other pin	V_{SS} - 0.3	4.0	V
$\|\Delta V_{DDx}\|$	Variations between different V_{DD} power pins	-	50	mV
$\|V_{SSx} - V_{SS}\|$	Variations between all the different ground pins	-	50	mV
$V_{ESD(HBM)}$	Electrostatic discharge voltage (human body model)			-

1. All main power (V_{DD}, V_{DDA}) and ground (V_{SS}, V_{SSA}) pins must always be connected to the external power supply, in the permitted range.

Table 22. Current characteristics

Symbol	Ratings	Max.	Unit
ΣI_{VDD}	Total current into sum of all VDD power lines (source)(1)	120	mA
ΣI_{VSS}	Total current out of sum of all VSS ground lines (sink)(1)	-120	
$I_{VDD(PIN)}$	Maximum current into each VDD power pin (source)(1)	100	
$I_{VSS(PIN)}$	Maximum current out of each VSS ground pin (sink)(1)	-100	
$I_{IO(PIN)}$	Output current sunk by any I/O and control pin	25	
	Output current source by any I/O and control pin	-25	
$\Sigma I_{IO(PIN)}$	Total output current sunk by sum of all I/Os and control pins(2)	80	
	Total output current sourced by sum of all I/Os and control pins(2)	-80	
	Total output current sourced by sum of all I/Os supplied by VDDIO2	-40	
$I_{INJ(PIN)}$(3)	Injected current on B, FT and FTf pins	-5/+0(4)	
	Injected current on TC and RST pin	± 5	
	Injected current on TTa pins(5)	± 5	
$\Sigma I_{INJ(PIN)}$	Total injected current (sum of all I/O and control pins)(6)	± 25	

1. All main power (VDD, VDDA) and ground (VSS, VSSA) pins must always be connected to the external power supply, in the permitted range.
2. This current consumption must be correctly distributed over all I/Os and control pins. The total output current must not be sunk/sourced between two consecutive power supply pins referring to high pin count QFP packages.

Table 23. Thermal characteristics

Symbol	Ratings	Value	Unit
T_{STG}	Storage temperature range	–65 to +150	°C
T_J	Maximum junction temperature	150	°C

6.3 Operating conditions

6.3.1 General operating conditions

Table 24. General operating conditions

Symbol	Parameter	Conditions	Min	Max	Unit
f_{HCLK}	Internal AHB clock frequency	-	0	48	MHz
f_{PCLK}	Internal APB clock frequency	-	0	48	
V_{DD}	Standard operating voltage	-	2.0	3.6	V
V_{DDIO2}	I/O supply voltage	Must not be supplied if V_{DD} is not present	1.65	3.6	V
V_{DDA}	Analog operating voltage (ADC and DAC not used)	Must have a potential equal to or higher than V_{DD}	V_{DD}	3.6	V
	Analog operating voltage (ADC and DAC used)		2.4	3.6	
V_{BAT}	Backup operating voltage	-	1.65	3.6	V
V_{IN}	I/O input voltage	TC and RST I/O	–0.3	V_{DDIOx}+0.3	V
		TTa I/O	–0.3	V_{DDA}+0.3(1)	
		FT and FTf I/O	–0.3	5.5(1)	
		BOOT0	0	5.5	
P_D	Power dissipation at T_A = 85 °C for suffix 6 or T_A = 105 °C for suffix 7(2)	UFBGA100	-	364	mW
		LQFP100	-	476	
		UFBGA64	-	308	
		LQFP64	-	455	
		LQFP48	-	370	
		UFQFPN48	-	625	
		WLCSP49	-	408	
T_A	Ambient temperature for the suffix 6 version	Maximum power dissipation	–40	85	°C
		Low power dissipation(3)	–40	105	
	Ambient temperature for the suffix 7 version	Maximum power dissipation	–40	105	°C
		Low power dissipation(3)	–40	125	
T_J	Junction temperature range	Suffix 6 version	–40	105	°C
		Suffix 7 version	–40	125	

1. For operation with a voltage higher than V_{DDIOx} + 0.3 V, the internal pull-up resistor must be disabled.

6.3.2 Operating conditions at power-up / power-down

Table 25. Operating conditions at power-up / power-down

Symbol	Parameter	Conditions	Min	Max	Unit
t_{VDD}	V_{DD} rise time rate	-	0	∞	µs/V
	V_{DD} fall time rate		20	∞	
t_{VDDA}	V_{DDA} rise time rate	-	0	∞	
	V_{DDA} fall time rate		20	∞	

6.3.3 Embedded reset and power control block characteristics

Table 26. Embedded reset and power control block characteristics

Symbol	Parameter	Conditions	Min	Typ	Max	Unit
$V_{POR/PDR}$(1)	Power on/power down reset threshold	Falling edge(2)	1.80	1.88	1.96(3)	V
		Rising edge	1.84(3)	1.92	2.00	V
$V_{PDRhyst}$	PDR hysteresis	-	-	40	-	mV
$t_{RSTTEMPO}$(4)	Reset temporization	-	1.50	2.50	4.50	ms

1. The PDR detector monitors V_{DD} and also V_{DDA} (if kept enabled in the option bytes). The POR detector monitors only V_{DD}.
2. The product behavior is guaranteed by design down to the minimum $V_{POR/PDR}$ value.
3. Data based on characterization results, not tested in production.
4. Guaranteed by design, not tested in production.

Table 27. Programmable voltage detector characteristics

Symbol	Parameter	Conditions	Min	Typ	Max	Unit
V_{PVD0}	PVD threshold 0	Rising edge	2.1	2.18	2.26	V
		Falling edge	2	2.08	2.16	V
V_{PVD1}	PVD threshold 1	Rising edge	2.19	2.28	2.37	V
		Falling edge	2.09	2.18	2.27	V
V_{PVD2}	PVD threshold 2	Rising edge	2.28	2.38	2.48	V
		Falling edge	2.18	2.28	2.38	V
V_{PVD3}	PVD threshold 3	Rising edge	2.38	2.48	2.58	V
		Falling edge	2.28	2.38	2.48	V

Table 27. Programmable voltage detector characteristics (continued)

Symbol	Parameter	Conditions	Min	Typ	Max	Unit
V_{PVD4}	PVD threshold 4	Rising edge	2.47	2.58	2.69	V
		Falling edge	2.37	2.48	2.59	V
V_{PVD5}	PVD threshold 5	Rising edge	2.57	2.68	2.79	V
		Falling edge	2.47	2.58	2.69	V
V_{PVD6}	PVD threshold 6	Rising edge	2.66	2.78	2.9	V
		Falling edge	2.56	2.68	2.8	V
V_{PVD7}	PVD threshold 7	Rising edge	2.76	2.88	3	V
		Falling edge	2.66	2.78	2.9	V
$V_{PVDhyst}$(1)	PVD hysteresis	-	-	100	-	mV
$I_{DD(PVD)}$	PVD current consumption	-	-	0.15	0.26(1)	µA

1. Guaranteed by design, not tested in production.

6.3.4 Embedded reference voltage

Table 28. Embedded internal reference voltage

Symbol	Parameter	Conditions	Min	Typ	Max	Unit
V_{REFINT}	Internal reference voltage	–40 °C < T_A < +105 °C	1.2	1.23	1.25	V
t_{START}	ADC_IN17 buffer startup time	-	-	-	10(1)	µs
$t_{S\_vrefint}$	ADC sampling time when reading the internal reference voltage	-	4(1)	-	-	µs
ΔV_{REFINT}	Internal reference voltage spread over the temperature range	V_{DDA} = 3 V	-	-	10(1)	mV
T_{Coeff}	Temperature coefficient	-	- 100(1)	-	100(1)	ppm/°C

1. Guaranteed by design, not tested in production.

6.3.5 Supply current characteristics

The current consumption is a function of several parameters and factors such as the operating voltage, ambient temperature, I/O pin loading, device software configuration, operating frequencies, I/O pin switching rate, program location in memory and executed binary code.

1. Guaranteed by design, not tested in production.

Figure 15. High-speed external clock source AC timing diagram

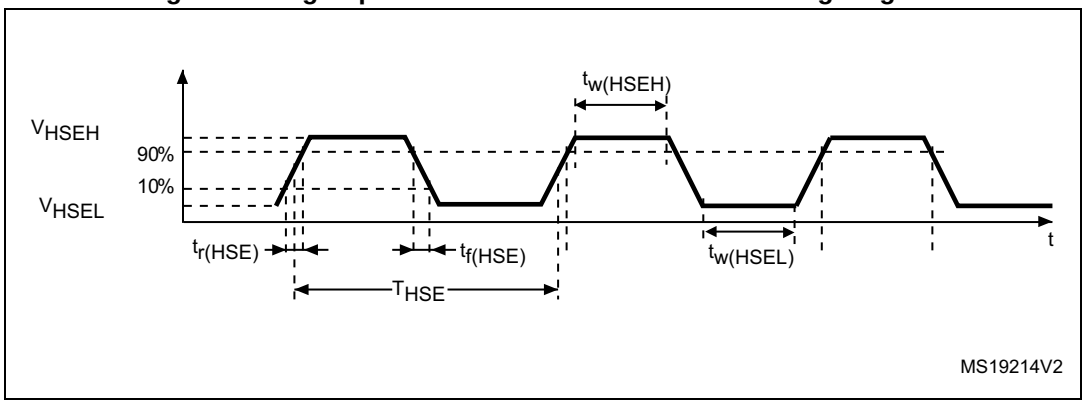

Low-speed external user clock generated from an external source

In bypass mode the LSE oscillator is switched off and the input pin is a standard GPIO.

Table 38. Low-speed external user clock characteristics

Symbol	Parameter[1]	Min	Typ	Max	Unit
f_{LSE_ext}	User external clock source frequency	-	32.768	1000	kHz
V_{LSEH}	OSC32_IN input pin high level voltage	0.7 V_{DDIOx}	-	V_{DDIOx}	V
V_{LSEL}	OSC32_IN input pin low level voltage	V_{SS}	-	0.3 V_{DDIOx}	
$t_{w(LSEH)}$ $t_{w(LSEL)}$	OSC32_IN high or low time	450	-	-	ns
$t_{r(LSE)}$ $t_{f(LSE)}$	OSC32_IN rise or fall time	-	-	50	

1. Guaranteed by design, not tested in production.

Figure 16. Low-speed external clock source AC timing diagram

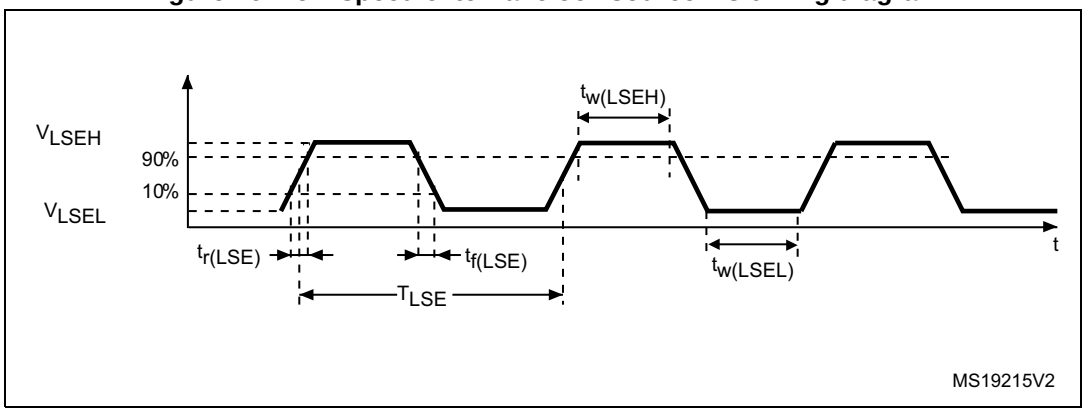

High-speed external clock generated from a crystal/ceramic resonator

The high-speed external (HSE) clock can be supplied with a 4 to 32 MHz crystal/ceramic resonator oscillator. All the information given in this paragraph are based on design simulation results obtained with typical external components specified in . In the application, the resonator and the load capacitors have to be placed as close as possible to the oscillator pins in order to minimize output distortion and startup stabilization time. Refer to the crystal resonator manufacturer for more details on the resonator characteristics (frequency, package, accuracy).

Table 39. HSE oscillator characteristics

Symbol	Parameter	Conditions[1]	Min[2]	Typ	Max[2]	Unit
f_{OSC_IN}	Oscillator frequency	-	4	8	32	MHz
R_F	Feedback resistor	-	-	200	-	kΩ
I_{DD}	HSE current consumption	During startup[3]	-	-	8.5	mA
		V_{DD} = 3.3 V, Rm = 30 Ω, CL = 10 pF@8 MHz	-	0.4	-	
		V_{DD} = 3.3 V, Rm = 45 Ω, CL = 10 pF@8 MHz	-	0.5	-	
		V_{DD} = 3.3 V, Rm = 30 Ω, CL = 5 pF@32 MHz	-	0.8	-	
		V_{DD} = 3.3 V, Rm = 30 Ω, CL = 10 pF@32 MHz	-	1	-	
		V_{DD} = 3.3 V, Rm = 30 Ω, CL = 20 pF@32 MHz	-	1.5	-	
g_m	Oscillator transconductance	Startup	10	-	-	mA/V
$t_{SU(HSE)}$[4]	Startup time	V_{DD} is stabilized	-	2	-	ms

1. Resonator characteristics given by the crystal/ceramic resonator manufacturer.
2. Guaranteed by design, not tested in production.
3. This consumption level occurs during the first 2/3 of the $t_{SU(HSE)}$ startup time
4. $t_{SU(HSE)}$ is the startup time measured from the moment it is enabled (by software) to a stabilized 8 MHz oscillation is reached. This value is measured for a standard crystal resonator and it can vary significantly with the crystal manufacturer

Table 52. I/O current injection susceptibility

Symbol	Description	Functional susceptibility		Unit
		Negative injection	Positive injection	
I_{INJ}	Injected current on BOOT0 and PF1 pins	–0	NA	mA
	Injected current on PC0 pin	–0	+5	
	Injected current on PA11 and PA12 pins with induced leakage current on adjacent pins less than -1 mA	–5	NA	
	Injected current on all other FT and FTf pins	–5	NA	
	Injected current on all other TTa, TC and RST pins	–5	+5	

6.3.14 I/O port characteristics

General input/output characteristics

Table 53. I/O static characteristics

Symbol	Parameter	Conditions	Min	Typ	Max	Unit
V_{IL}	Low level input voltage	TC and TTa I/O	-	-	$0.3\ V_{DDIOx}+0.07^{(1)}$	V
		FT and FTf I/O	-	-	$0.475\ V_{DDIOx}–0.2^{(1)}$	
		BOOT0	-	-	$0.3\ V_{DDIOx}–0.3^{(1)}$	
		All I/Os except BOOT0 pin	-	-	$0.3\ V_{DDIOx}$	
V_{IH}	High level input voltage	TC and TTa I/O	$0.445\ V_{DDIOx}+0.398^{(1)}$	-	-	V
		FT and FTf I/O	$0.5\ V_{DDIOx}+0.2^{(1)}$	-	-	
		BOOT0	$0.2\ V_{DDIOx}+0.95^{(1)}$	-	-	
		All I/Os except BOOT0 pin	$0.7\ V_{DDIOx}$	-	-	
V_{hys}	Schmitt trigger hysteresis	TC and TTa I/O	-	$200^{(1)}$	-	mV
		FT and FTf I/O	-	$100^{(1)}$	-	
		BOOT0	-	$300^{(1)}$	-	

Table 55. I/O AC characteristics(1)(2) (continued)

OSPEEDRy [1:0] value(1)	Symbol	Parameter	Conditions	Min	Max	Unit
Fm+ configuration (4)	$f_{max(IO)out}$	Maximum frequency(3)	C_L = 50 pF, $V_{DDIOx} \geq 2$ V	-	2	MHz
	$t_{f(IO)out}$	Output fall time		-	12	ns
	$t_{r(IO)out}$	Output rise time		-	34	
	$f_{max(IO)out}$	Maximum frequency(3)	C_L = 50 pF, $V_{DDIOx} < 2$ V	-	0.5	MHz
	$t_{f(IO)out}$	Output fall time		-	16	ns
	$t_{r(IO)out}$	Output rise time		-	44	
-	t_{EXTIpw}	Pulse width of external signals detected by the EXTI controller	-	10	-	ns

1. The I/O speed is configured using the OSPEEDRx[1:0] bits. Refer to the STM32F0xxxx RM0091 reference manual for a description of GPIO Port configuration register.
2. Guaranteed by design, not tested in production.

Figure 24. I/O AC characteristics definition

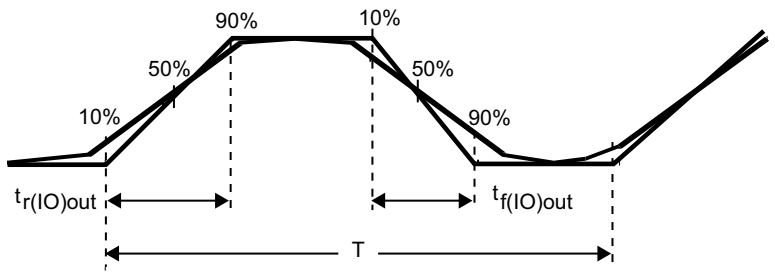

Maximum frequency is achieved if $(t_r + t_f) \leq \frac{2}{3}T$ and if the duty cycle is (45-55%) when loaded by C_L (see the table *I/O AC characteristics definition*)

MS32132V3

6.3.15 NRST pin characteristics

The NRST pin input driver uses the CMOS technology. It is connected to a permanent pull-up resistor, R_{PU}.

Unless otherwise specified, the parameters given in the table below are derived from tests

Table 56. NRST pin characteristics

Symbol	Parameter	Conditions	Min	Typ	Max	Unit
$V_{IL(NRST)}$	NRST input low level voltage	-	-	-	0.3 V_{DD}+0.07(1)	V
$V_{IH(NRST)}$	NRST input high level voltage	-	0.445 V_{DD}+0.398(1)	-	-	

Table 56. NRST pin characteristics (continued)

Symbol	Parameter	Conditions	Min	Typ	Max	Unit
$V_{hys(NRST)}$	NRST Schmitt trigger voltage hysteresis	-	-	200	-	mV
R_{PU}	Weak pull-up equivalent resistor(2)	$V_{IN} = V_{SS}$	25	40	55	kΩ
$V_{F(NRST)}$	NRST input filtered pulse	-	-	-	100(1)	ns
$V_{NF(NRST)}$	NRST input not filtered pulse	$2.7 < V_{DD} < 3.6$	300(3)	-	-	ns
		$2.0 < V_{DD} < 3.6$	500(3)	-	-	

1. Data based on design simulation only. Not tested in production.
2. The pull-up is designed with a true resistance in series with a switchable PMOS. This PMOS contribution to the series resistance is minimal (~10% order).
3. Data based on design simulation only. Not tested in production.

Figure 25. Recommended NRST pin protection

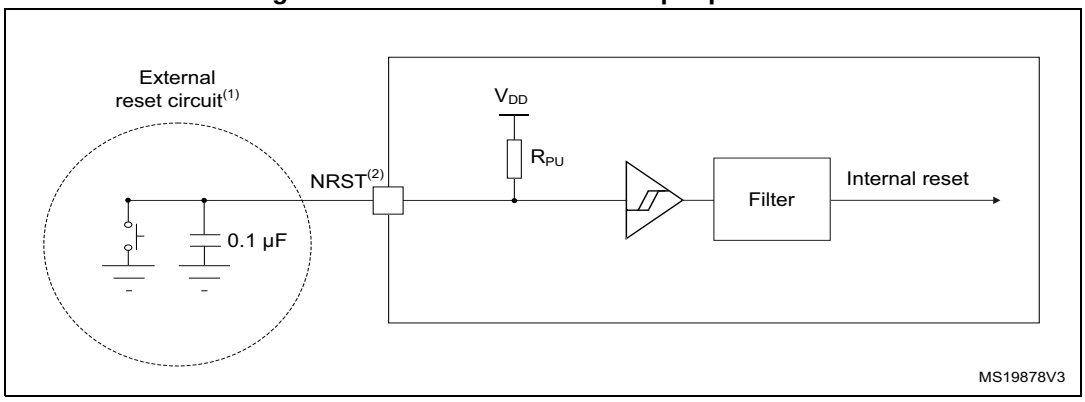

1. The external capacitor protects the device against parasitic resets.

6.3.16 12-bit ADC characteristics

Note: It is recommended to perform a calibration after each power-up.

Table 57. ADC characteristics

Symbol	Parameter	Conditions	Min	Typ	Max	Unit
V_{DDA}	Analog supply voltage for ADC ON	-	2.4	-	3.6	V
$I_{DDA\ (ADC)}$	Current consumption of the ADC(1)	$V_{DDA} = 3.3$ V	-	0.9	-	mA
f_{ADC}	ADC clock frequency	-	0.6	-	14	MHz
f_S(2)	Sampling rate	12-bit resolution	0.043	-	1	MHz

Table 57. ADC characteristics (continued)

Symbol	Parameter	Conditions	Min	Typ	Max	Unit
f_{TRIG}(2)	External trigger frequency	f_{ADC} = 14 MHz, 12-bit resolution	-	-	823	kHz
		12-bit resolution	-	-	17	$1/f_{ADC}$
V_{AIN}	Conversion voltage range	-	0	-	V_{DDA}	V
R_{AIN}(2)	External input impedance		-	-	50	kΩ
R_{ADC}(2)	Sampling switch resistance	-	-	-	1	kΩ
C_{ADC}(2)	Internal sample and hold capacitor	-	-	-	8	pF
t_{CAL}(2)(3)	Calibration time	f_{ADC} = 14 MHz	5.9			µs
		-	83			$1/f_{ADC}$
$W_{LATENCY}$(2)(4)	ADC_DR register ready latency	ADC clock = HSI14	1.5 ADC cycles + 2 f_{PCLK} cycles	-	1.5 ADC cycles + 3 f_{PCLK} cycles	-
		ADC clock = PCLK/2	-	4.5	-	f_{PCLK} cycle
		ADC clock = PCLK/4	-	8.5	-	f_{PCLK} cycle
t_{latr}(2)	Trigger conversion latency	$f_{ADC} = f_{PCLK}/2$ = 14 MHz	0.196			µs
		$f_{ADC} = f_{PCLK}/2$	5.5			$1/f_{PCLK}$
		$f_{ADC} = f_{PCLK}/4$ = 12 MHz	0.219			µs
		$f_{ADC} = f_{PCLK}/4$	10.5			$1/f_{PCLK}$
		$f_{ADC} = f_{HSI14}$ = 14 MHz	0.179	-	0.250	µs
$Jitter_{ADC}$	ADC jitter on trigger conversion	$f_{ADC} = f_{HSI14}$	-	1	-	$1/f_{HSI14}$
t_S(2)	Sampling time	f_{ADC} = 14 MHz	0.107	-	17.1	µs
		-	1.5	-	239.5	$1/f_{ADC}$
t_{STAB}(2)	Stabilization time	-	14			$1/f_{ADC}$
t_{CONV}(2)	Total conversion time (including sampling time)	f_{ADC} = 14 MHz, 12-bit resolution	1	-	18	µs
		12-bit resolution	14 to 252 (t_S for sampling +12.5 for successive approximation)			$1/f_{ADC}$

1. During conversion of the sampled value (12.5 x ADC clock period), an additional consumption of 100 µA on I_{DDA} and 60 µA on I_{DD} should be taken into account.
2. Guaranteed by design, not tested in production.
3. Specified value includes only ADC timing. It does not include the latency of the register access.
4. This parameter specify latency for transfer of the conversion result to the ADC_DR register. EOC flag is set at this time.

6.3.17 DAC electrical specifications

Table 60. DAC characteristics

Symbol	Parameter	Min	Typ	Max	Unit	Comments
V_{DDA}	Analog supply voltage for DAC ON	2.4	-	3.6	V	-
R_{LOAD}(1)	Resistive load with buffer ON	5	-	-	kΩ	Load connected to V_{SSA}
		25	-	-	kΩ	Load connected to V_{DDA}
R_O(1)	Impedance output with buffer OFF	-	-	15	kΩ	When the buffer is OFF, the Minimum resistive load between DAC_OUT and V_{SS} to have a 1% accuracy is 1.5 MΩ
C_{LOAD}(1)	Capacitive load	-	-	50	pF	Maximum capacitive load at DAC_OUT pin (when the buffer is ON).
DAC_OUT min(1)	Lower DAC_OUT voltage with buffer ON	0.2	-	-	V	It gives the maximum output excursion of the DAC. It corresponds to 12-bit input code (0x0E0) to (0xF1C) at V_{DDA} = 3.6 V and (0x155) and (0xEAB) at V_{DDA} = 2.4 V
DAC_OUT max(1)	Higher DAC_OUT voltage with buffer ON	-	-	V_{DDA} – 0.2	V	
DAC_OUT min(1)	Lower DAC_OUT voltage with buffer OFF	-	0.5	-	mV	It gives the maximum output excursion of the DAC.
DAC_OUT max(1)	Higher DAC_OUT voltage with buffer OFF	-	-	V_{DDA} – 1LSB	V	
I_{DDA}(1)	DAC DC current consumption in quiescent mode(2)	-	-	600	µA	With no load, middle code (0x800) on the input
		-	-	700	µA	With no load, worst code (0xF1C) on the input
DNL(3)	Differential non linearity Difference between two consecutive code-1LSB)	-	-	±0.5	LSB	Given for the DAC in 10-bit configuration
		-	-	±2	LSB	Given for the DAC in 12-bit configuration
INL(3)	Integral non linearity (difference between measured value at Code i and the value at Code i on a line drawn between Code 0 and last Code 1023)	-	-	±1	LSB	Given for the DAC in 10-bit configuration
		-	-	±4	LSB	Given for the DAC in 12-bit configuration
Offset(3)	Offset error (difference between measured value at Code (0x800) and the ideal value = V_{DDA}/2)	-	-	±10	mV	-
		-	-	±3	LSB	Given for the DAC in 10-bit at V_{DDA} = 3.6 V
		-	-	±12	LSB	Given for the DAC in 12-bit at V_{DDA} = 3.6 V

Table 60. DAC characteristics (continued)

Symbol	Parameter	Min	Typ	Max	Unit	Comments
Gain error(3)	Gain error	-	-	±0.5	%	Given for the DAC in 12-bit configuration
$t_{SETTLING}$(3)	Settling time (full scale: for a 10-bit input code transition between the lowest and the highest input codes when DAC_OUT reaches final value ±1LSB	-	3	4	µs	$C_{LOAD} \leq 50$ pF, $R_{LOAD} \geq 5$ kΩ
Update rate(3)	Max frequency for a correct DAC_OUT change when small variation in the input code (from code i to i+1LSB)	-	-	1	MS/s	$C_{LOAD} \leq 50$ pF, $R_{LOAD} \geq 5$ kΩ
t_{WAKEUP}(3)	Wakeup time from off state (Setting the ENx bit in the DAC Control register)	-	6.5	10	µs	$C_{LOAD} \leq 50$ pF, $R_{LOAD} \geq 5$ kΩ input code between lowest and highest possible ones.
PSRR+ (1)	Power supply rejection ratio (to V_{DDA}) (static DC measurement	-	–67	–40	dB	No R_{LOAD}, C_{LOAD} = 50 pF

1. Guaranteed by design, not tested in production.
2. The DAC is in “quiescent mode” when it keeps the value steady on the output so no dynamic consumption is involved.
3. Data based on characterization results, not tested in production.

Figure 28. 12-bit buffered / non-buffered DAC

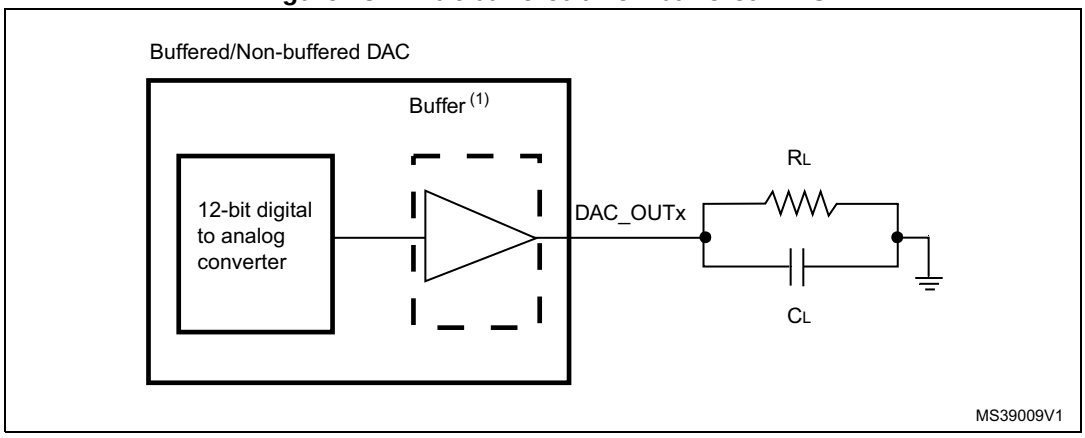

1. The DAC integrates an output buffer that can be used to reduce the output impedance and to drive external loads directly without the use of an external operational amplifier. The buffer can be bypassed by configuring the BOFFx bit in the DAC_CR register.

6.3.18 Comparator characteristics

Table 61. Comparator characteristics

Symbol	Parameter	Conditions		Min(1)	Typ	Max(1)	Unit
V_{DDA}	Analog supply voltage	-		V_{DD}	-	3.6	V
V_{IN}	Comparator input voltage range	-		0	-	V_{DDA}	-
V_{SC}	V_{REFINT} scaler offset voltage	-		-	±5	±10	mV
t_{S_SC}	V_{REFINT} scaler startup time from power down	First V_{REFINT} scaler activation after device power on		-	-	1000 (2)	ms
		Next activations		-	-	0.2	
t_{START}	Comparator startup time	Startup time to reach propagation delay specification		-	-	60	µs
t_D	Propagation delay for 200 mV step with 100 mV overdrive	Ultra-low power mode		-	2	4.5	µs
		Low power mode		-	0.7	1.5	
		Medium power mode		-	0.3	0.6	
		High speed mode	$V_{DDA} \geq 2.7$ V	-	50	100	ns
			$V_{DDA} < 2.7$ V	-	100	240	
	Propagation delay for full range step with 100 mV overdrive	Ultra-low power mode		-	2	7	µs
		Low power mode		-	0.7	2.1	
		Medium power mode		-	0.3	1.2	
		High speed mode	$V_{DDA} \geq 2.7$ V	-	90	180	ns
			$V_{DDA} < 2.7$ V	-	110	300	
V_{offset}	Comparator offset error	-		-	±4	±10	mV
dV_{offset}/dT	Offset error temperature coefficient	-		-	18	-	µV/°C
$I_{DD(COMP)}$	COMP current consumption	Ultra-low power mode		-	1.2	1.5	µA
		Low power mode		-	3	5	
		Medium power mode		-	10	15	
		High speed mode		-	75	100	

Table 61. Comparator characteristics (continued)

Symbol	Parameter	Conditions		Min(1)	Typ	Max(1)	Unit
V_{hys}	Comparator hysteresis	No hysteresis (COMPxHYST[1:0]=00)	-	-	0	-	mV
		Low hysteresis (COMPxHYST[1:0]=01)	High speed mode	3	8	13	
			All other power modes	5		10	
		Medium hysteresis (COMPxHYST[1:0]=10)	High speed mode	7	15	26	
			All other power modes	9		19	
		High hysteresis (COMPxHYST[1:0]=11)	High speed mode	18	31	49	
			All other power modes	19		40	

1. Data based on characterization results, not tested in production.
2. For more details and conditions see *Figure 29: Maximum V_{REFINT} scaler startup time from power down*.

Figure 29. Maximum V_{REFINT} scaler startup time from power down

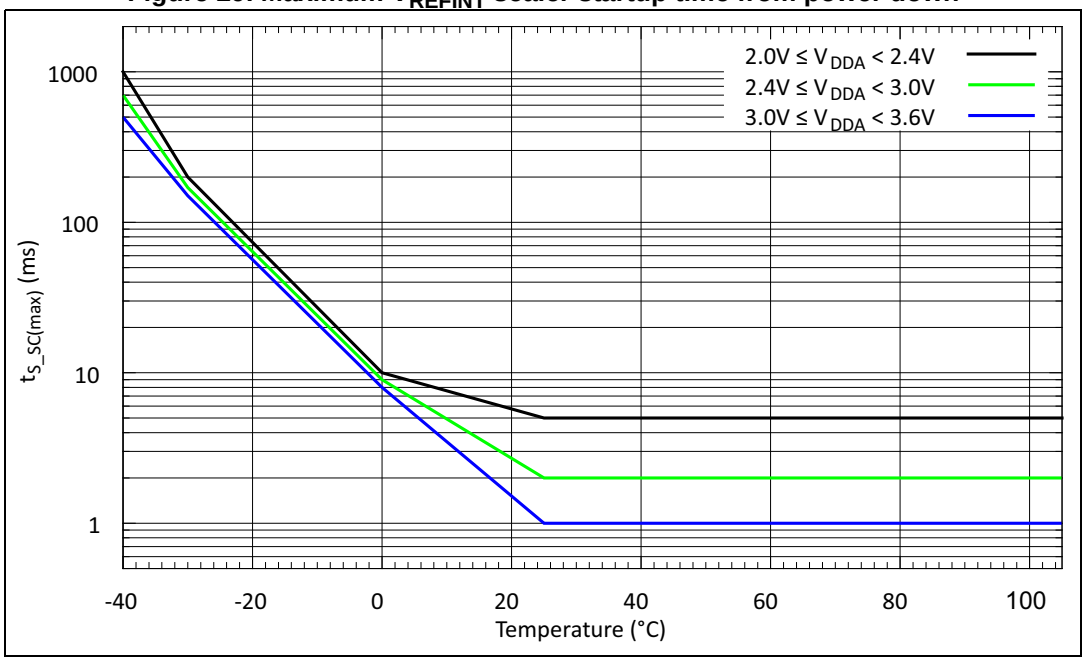

USB characteristics

The STM32F072x8/xB USB interface is fully compliant with the USB specification version 2.0 and is USB-IF certified (for Full-speed device operation).

Table 70. USB electrical characteristics

Symbol	Parameter	Conditions	Min.	Typ	Max.	Unit
V_{DDIO2}	USB transceiver operating voltage	-	3.0(1)	-	3.6	V
$t_{STARTUP}$(2)	USB transceiver startup time	-	-	-	1.0	µs
R_{PUI}	Embedded USB_DP pull-up value during idle	-	1.1	1.26	1.5	kΩ
R_{PUR}	Embedded USB_DP pull-up value during reception	-	2.0	2.26	2.6	
Z_{DRV}(2)	Output driver impedance(3)	Driving high and low	28	40	44	Ω

1. The STM32F072x8/xB USB functionality is ensured down to 2.7 V but not the full USB electrical characteristics which are degraded in the 2.7-to-3.0 V voltage range.
2. Guaranteed by design, not tested in production.
3. No external termination series resistors are required on USB_DP (D+) and USB_DM (D-); the matching impedance is already included in the embedded driver.