CD54/74HC4051, CD54/74HCT4051, CD54/74HC4052, CD74HCT4052, CD54/74HC4053, CD74HCT4053

High-Speed CMOS Logic Analog Multiplexers/Demultiplexers

Features

- **Wide Analog Input Voltage Range . . . . . ±5V Max**
- **Low "On" Resistance**
  - **70Ω Typical (V_{CC} - V_{EE} = 4.5V)**
  - **40Ω Typical (V_{CC} - V_{EE} = 9V)**
- **Low Crosstalk between Switches**
- **Fast Switching and Propagation Speeds**
- **"Break-Before-Make" Switching**
- **Wide Operating Temperature Range . . -55°C to 125°C**
- **CD54HC/CD74HC Types**
  - **Operation Control Voltage . . . . . 2V to 6V**
  - **Switch Voltage . . . . . 0V to 10V**
  - **High Noise Immunity . . . N_{IL} = 30%, N_{IH} = 30% of V_{CC}, V_{CC} = 5V**
- **CD54HCT/CD74HCT Types**
  - **Operation Control Voltage . . . . . 4.5V to 5.5V**
  - **Switch Voltage . . . . . 0V to 10V**
  - **Direct LSTTL Input Logic Compatibility . . . V_{IL} = 0.8V Max, V_{IH} = 2V Min**
  - **CMOS Input Compatibility . . . . . $I_I \leq 1\mu A$ at V_{OL}, V_{OH}**

Description

These devices are digitally controlled analog switches which utilize silicon gate CMOS technology to achieve operating speeds similar to LSTTL with the low power consumption of standard CMOS integrated circuits.

These analog multiplexers/demultiplexers control analog voltages that may vary across the voltage supply range (i.e. V_{CC} to V_{EE}). They are bidirectional switches thus allowing any analog input to be used as an output and vice-versa. The switches have low "on" resistance and low "off" leakages. In addition, all three devices have an enable control which, when high, disables all switches to their "off" state.

Ordering Information

PART NUMBER	TEMP. RANGE (°C)	PACKAGE
CD54HC4051F3A	-55 to 125	16 Ld CERDIP
CD54HC4052F3A	-55 to 125	16 Ld CERDIP
CD54HC4053F3A	-55 to 125	16 Ld CERDIP
CD54HCT4051F3A	-55 to 125	16 Ld CERDIP

Ordering Information

PART NUMBER	TEMP. RANGE (°C)	PACKAGE
CD74HC4051E	-55 to 125	16 Ld PDIP
CD74HC4051M	-55 to 125	16 Ld SOIC
CD74HC4051MT	-55 to 125	16 Ld SOIC
CD74HC4051M96	-55 to 125	16 Ld SOIC
CD74HC4051NSR	-55 to 125	16 Ld SOP
CD74HC4051PWR	-55 to 125	16 Ld TSSOP
CD74HC4051PWT	-55 to 125	16 Ld TSSOP
CD74HC4052E	-55 to 125	16 Ld PDIP
CD74HC4052M	-55 to 125	16 Ld SOIC
CD74HC4052MT	-55 to 125	16 Ld SOIC
CD74HC4052M96	-55 to 125	16 Ld SOIC
CD74HC4052NSR	-55 to 125	16 Ld SOP
CD74HC4052PW	-55 to 125	16 Ld TSSOP
CD74HC4052PWR	-55 to 125	16 Ld TSSOP
CD74HC4052PWT	-55 to 125	16 Ld TSSOP
CD74HC4053E	-55 to 125	16 Ld PDIP
CD74HC4053M	-55 to 125	16 Ld SOIC
CD74HC4053MT	-55 to 125	16 Ld SOIC
CD74HC4053M96	-55 to 125	16 Ld SOIC
CD74HC4053NSR	-55 to 125	16 Ld SOP
CD74HC4053PW	-55 to 125	16 Ld TSSOP
CD74HC4053PWR	-55 to 125	16 Ld TSSOP
CD74HC4053PWT	-55 to 125	16 Ld TSSOP
CD74HCT4051E	-55 to 125	16 Ld PDIP
CD74HCT4051M	-55 to 125	16 Ld SOIC
CD74HCT4051MT	-55 to 125	16 Ld SOIC
CD74HCT4051M96	-55 to 125	16 Ld SOIC
CD74HCT4052E	-55 to 125	16 Ld PDIP
CD74HCT4052M	-55 to 125	16 Ld SOIC
CD74HCT4052MT	-55 to 125	16 Ld SOIC
CD74HCT4052M96	-55 to 125	16 Ld SOIC
CD74HCT4053E	-55 to 125	16 Ld PDIP
CD74HCT4053M	-55 to 125	16 Ld SOIC
CD74HCT4053MT	-55 to 125	16 Ld SOIC
CD74HCT4053M96	-55 to 125	16 Ld SOIC
CD74HCT4053PWR	-55 to 125	16 Ld TSSOP
CD74HCT4053PWT	-55 to 125	16 Ld TSSOP

NOTE: When ordering, use the entire part number. The suffixes 96 and R denote tape and reel. The suffix T denotes a small-quantity reel of 250.

Pinouts

CD54HC4051, CD54HCT4051
(CERDIP)
CD74HC4051
(PDIP, SOIC, SOP, TSSOP)
CD74HCT4051
(PDIP, SOIC)
TOP VIEW

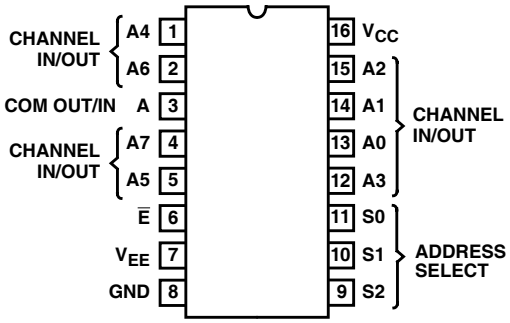

CD54HC4052
(CERDIP)
CD74HC4052
(PDIP, SOIC, SOP, TSSOP)
CD74HCT4052
(PDIP, SOIC)
TOP VIEW

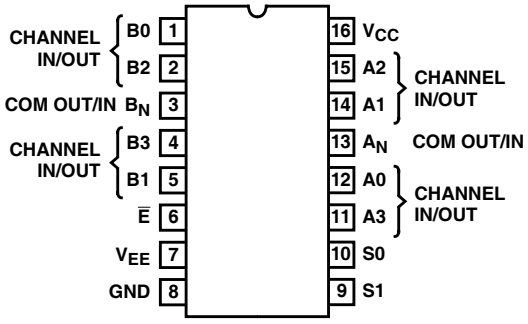

CD54HC4053
(CERDIP)
CD74HC4053
(PDIP, SOIC, SOP, TSSOP)
CD74HCT4053
(PDIP, SOIC, TSSOP)
TOP VIEW

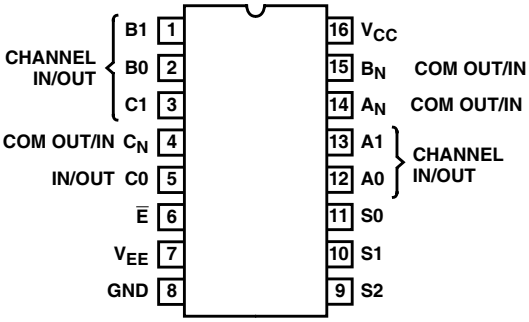

Functional Diagram of HC/HCT4051

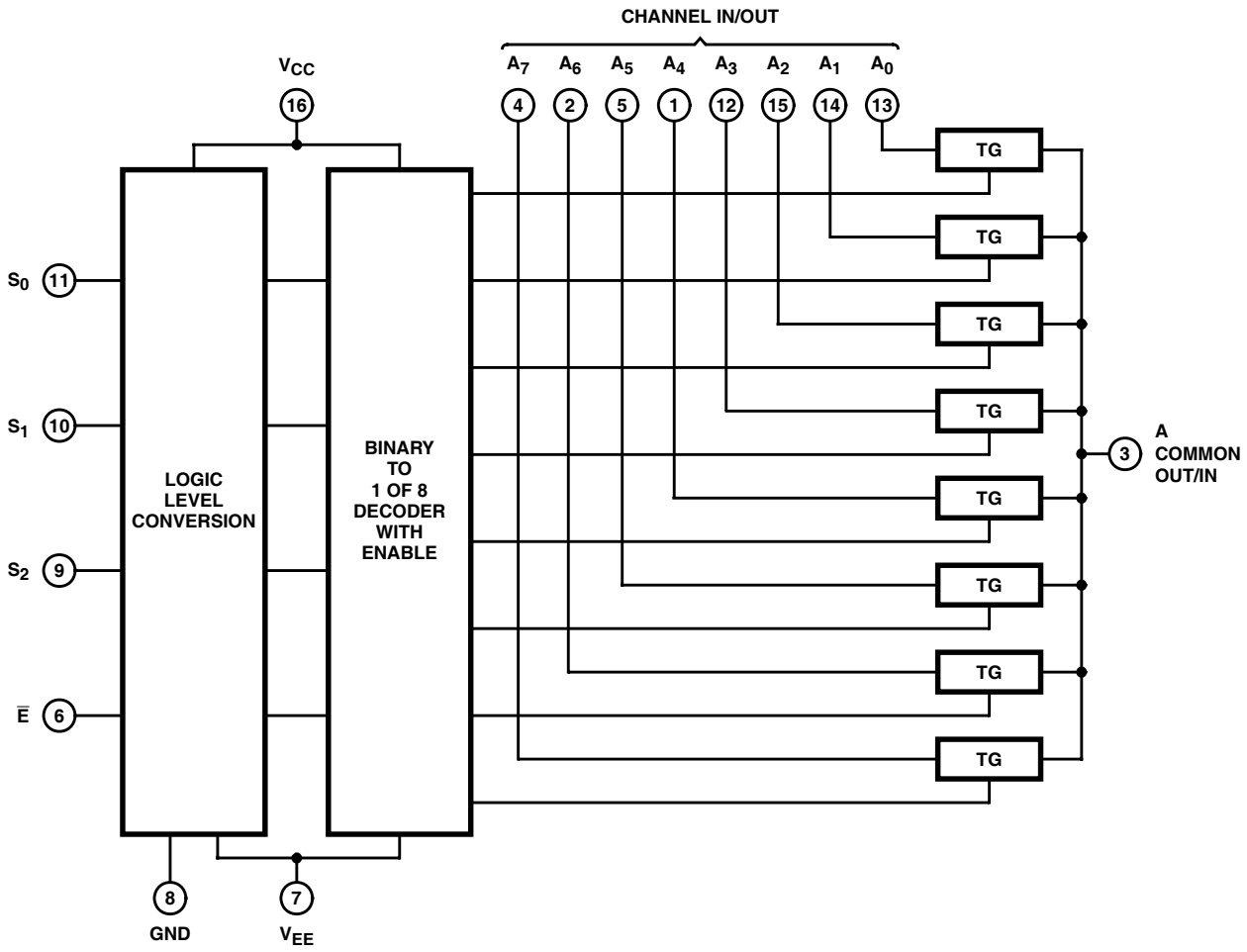

TRUTH TABLE
HC/HCT4051

INPUT STATES				“ON” CHANNELS
ENABLE	S_2	S_1	S_0	
L	L	L	L	A0
L	L	L	H	A1
L	L	H	L	A2
L	L	H	H	A3
L	H	L	L	A4
L	H	L	H	A5
L	H	H	L	A6
L	H	H	H	A7
H	X	X	X	None

X = Don’t care

Functional Diagram of ’HC4052, CD74HCT4052

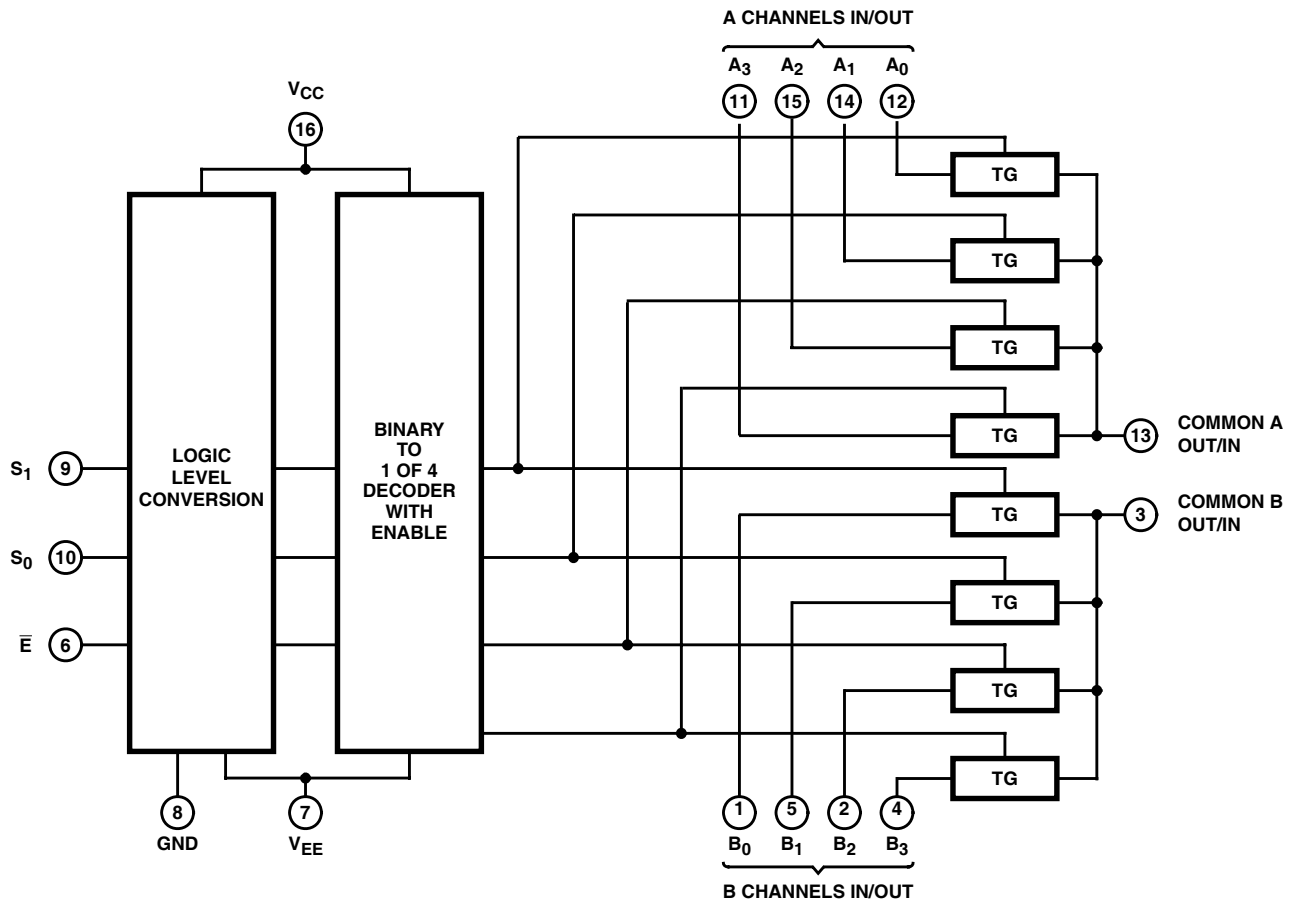

TRUTH TABLE
’HC4052, CD74HCT4052

INPUT STATES			“ON” CHANNELS
ENABLE	S_1	S_0	
L	L	L	A0, B0
L	L	H	A1, B1
L	H	L	A2. B2
L	H	H	A3, B3
H	X	X	None

X = Don’t care

Functional Diagram of ’HC4053, CD74HCT4053

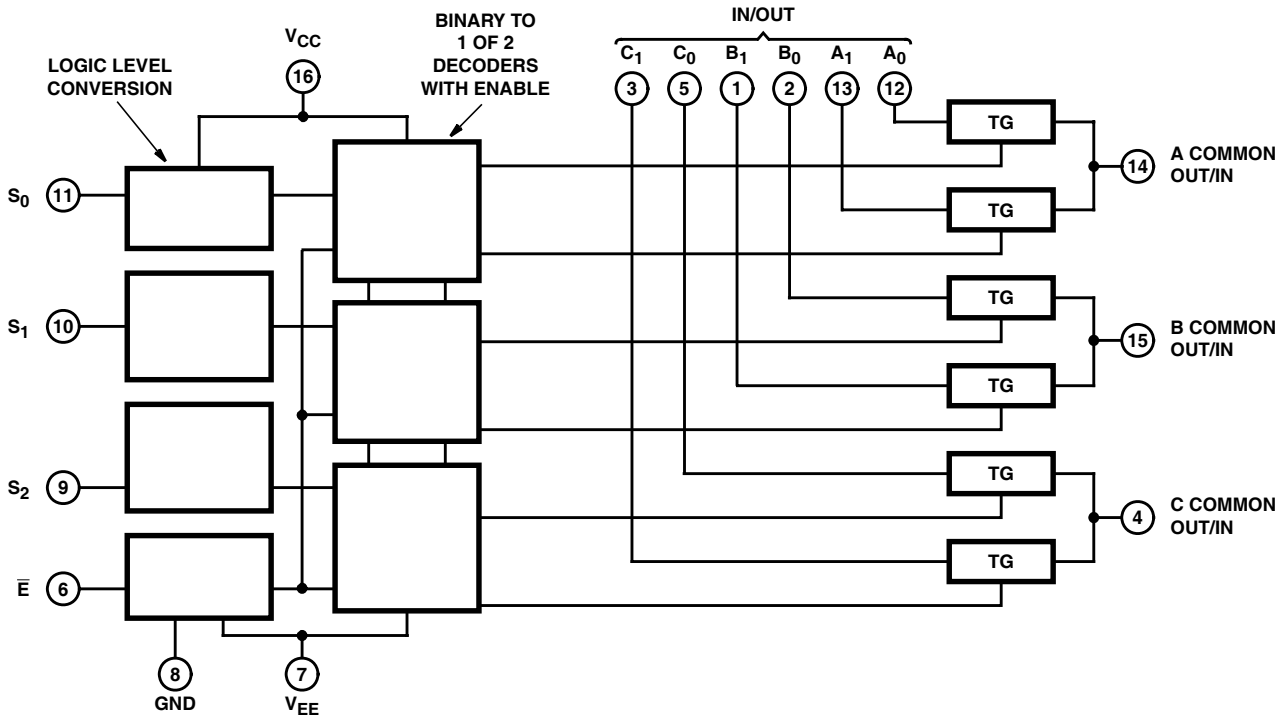

TRUTH TABLE
’HC4053, CD74HCT4053

INPUT STATES				“ON” CHANNELS
ENABLE	S_0	S_1	S_2	
L	L	L	L	C0, B0, A0
L	H	L	L	C0, B0, A1
L	L	H	L	C0, B1, A0
L	H	H	L	C0, B1, A1
L	L	L	H	C1, B0, A0
L	H	L	H	C1, B0, A1
L	L	H	H	C1, B1, A0
L	H	H	H	C1, B1, A1
H	X	X	X	None

X = Don’t care

Absolute Maximum Ratings (Note 2)

DC Supply Voltage, V_{CC} - V_{EE} . . . . . -0.5V to 10.5V
DC Supply Voltage, V_{CC} . . . . . -0.5V to +7V
DC Supply Voltage, V_{EE} . . . . . +0.5V to -7V
DC Input Diode Current, I_{IK}
For V_I < -0.5V or V_I > V_{CC} + 0.5V . . . . . ±20mA
DC Switch Diode Current, I_{OK}
For V_I < V_{EE} -0.5V or V_I > V_{CC} + 0.5V . . . . . ±20mA
DC Switch Current, (Note 2)
For V_I > V_{EE} -0.5V or V_I < V_{CC} + 0.5V . . . . . ±25mA
DC V_{CC} or Ground Current, I_{CC} . . . . . ±50mA
DC V_{EE} Current, I_{EE} . . . . . -20mA

Thermal Information

Package Thermal Impedance, θ_{JA} (see Note 1):
E (PDIP) Package . . . . . 67°C/W
M (SOIC) Package. . . . . 73°C/W
NS (SOP) Package . . . . . 64°C/W
PW (TSSOP) Package . . . . . 108°C/W
Maximum Junction Temperature . . . . . 150°C
Maximum Storage Temperature Range . . . . . -65°C to 150°C
Maximum Lead Temperature (Soldering 10s) . . . . . 300°C

NOTE:

1. The package thermal impedance is calculated in accordance with JESD 51-7.

Recommended Operating Conditions

For maximum reliability, nominal operating conditions should be selected so that operation is always within the following ranges

PARAMETER	MIN	MAX	UNITS
Supply Voltage Range (For T_A = Full Package Temperature Range), V_{CC} (Note 2)			
CD54/74HC Types	2	6	V
CD54/74HCT Types	4.5	5.5	V
Supply Voltage Range (For T_A = Full Package Temperature Range), V_{CC} - V_{EE}			
CD54/74HC Types, CD54/74HCT Types (See Figure 1)	2	10	V
Supply Voltage Range (For T_A = Full Package Temperature Range), V_{EE} (Note 3)			
CD54/74HC Types, CD54/74HCT Types (See Figure 2)	0	-6	V
DC Input Control Voltage, V_I	GND	V_{CC}	V
Analog Switch I/O Voltage, V_{IS}	V_{EE}	V_{CC}	V
Operating Temperature, T_A	-55	125	°C
Input Rise and Fall Times, t_r, t_f			
2V	0	1000	ns
4.5V	0	500	ns
6V	0	400	ns

CAUTION: Stresses above those listed in “Absolute Maximum Ratings” may cause permanent damage to the device. This is a stress only rating and operation of the device at these or any other conditions above those indicated in the operational sections of this specification is not implied.

NOTES:

2. All voltages referenced to GND unless otherwise specified..
3. In certain applications, the external load resistor current may include both V_{CC} and signal line components. To avoid drawing V_{CC} current when switch current flows into the transmission gate inputs, the voltage drop across the bidirectional switch must not exceed 0.6V (calculated from r_{ON} values shown in Electrical Specifications table). No V_{CC} current will flow through R_L if the switch current flows into terminal 3 on the HC/HCT4051; terminals 3 and 13 on the HC/HCT4052; terminals 4, 14 and 15 on the HC/HCT4053.

Recommended Operating Area as a Function of Supply Voltages

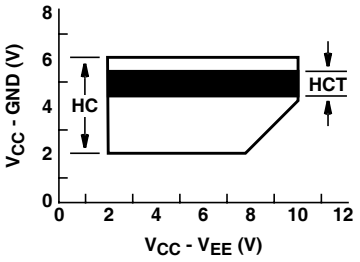

FIGURE 1.

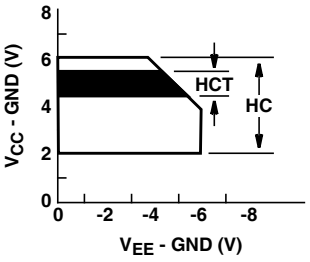

FIGURE 2.

DC Electrical Specifications

PARAMETER	TEST CONDITIONS				AMBIENT TEMPERATURE, T_A							UNITS
	V_{IS} (V)	V_I (V)	V_{EE} (V)	V_{CC} (V)	25°C			-40°C - 85°C		-55°C - 125°C		
					MIN	TYP	MAX	MIN	MAX	MIN	MAX	
HC TYPES												
High Level Input Voltage, V_{IH}				2	1.5	-	-	1.5	-	1.5	-	V
				4.5	3.15	-	-	3.15	-	3.15	0	V
				6	4.2	-	-	4.2	-	4.2	-	V
Low Level Input Voltage, V_{IL}				2	-	-	0.5	-	0.5	-	0.5	V
				4.5	-	-	1.35	-	1.35	-	1.35	V
				6	-	-	1.8	-	1.8	-	1.8	V
On Resistance, r_{ON} I_O = 1mA, (Figure 11)	V_{CC} or V_{EE}	V_{IL} or V_{IH}	0	4.5	-	70	160	-	200	-	240	Ω
			0	6	-	60	140	-	175	-	210	Ω
			-4.5	4.5	-	40	120	-	150	-	180	Ω
	V_{CC} to V_{EE}		0	4.5	-	90	180	-	225	-	270	Ω
			0	6	-	80	160	-	200	-	240	Ω
			-4.5	4.5	-	45	130	-	162	-	195	Ω
Maximum On Resistance Between any Two Channels, Δr_{ON}			0	4.5	-	10	-	-	-	-	-	Ω
			0	6	-	8.5	-	-	-	-	-	Ω
			-4.5	4.5	-	5	-	-	-	-	-	Ω
Switch On/Off Leakage Current, I_{IZ}	For Switch Off: When $V_{IS} = V_{CC}$, $V_{OS} = V_{EE}$; When $V_{IS} = V_{EE}$, $V_{OS} = V_{CC}$ For Switch On: All Applicable Combinations of V_{IS} and V_{OS} Voltage Levels	V_{IL} or V_{IH}										
1 and 2 Channels			0	6	-	-	±0.1	-	±1	-	±1	µA
4053			-5	5	-	-	±0.1	-	±1	-	±1	µA
4 Channels			0	6	-	-	±0.1	-	±1	-	±1	µA
4052			-5	5	-	-	±0.2	-	±2	-	±2	µA
8 Channels			0	6	-	-	±0.2	-	±2	-	±2	µA
4051			-5	5	-	-	±0.4	-	±4	-	±4	µA
Control Input Leakage Current, I_{IL}		V_{CC} or GND	0	6	-	-	±0.1	-	±1	-	±1	µA
Quiescent Device Current, I_{CC} I_O = 0	When $V_{IS} = V_{EE}$, $V_{OS} = V_{CC}$	V_{CC} or GND	0	6	-	-	8	-	80	-	160	µA
	When $V_{IS} = V_{CC}$, $V_{OS} = V_{EE}$		-5	5	-	-	16	-	160	-	320	µA

DC Electrical Specifications (Continued)

PARAMETER	TEST CONDITIONS				AMBIENT TEMPERATURE, T_A							UNITS
					25°C			-40°C - 85°C		-55°C - 125°C		
	V_{IS} (V)	V_I (V)	V_{EE} (V)	V_{CC} (V)	MIN	TYP	MAX	MIN	MAX	MIN	MAX	
HCT TYPES												
High Level Input Voltage, V_{IH}				4.5 to 5.5	2	-	-	2	-	2	-	V
Low Level Input Voltage, V_{IL}				4.5 to 5.5	-	-	0.8	-	0.8	-	0.8	V
On Resistance, r_{ON} I_O = 1mA, (Figure 15)	V_{CC} or V_{EE}	V_{IL} or V_{IH}	0	4.5	-	70	160	-	200	-	240	Ω
			-	-	-	-	-	-	-	-	-	Ω
			-4.5	4.5	-	40	120	-	150	-	180	Ω
	V_{CC} to V_{EE}		0	4.5	-	90	180	-	225	-	270	Ω
			-	-	-	-	-	-	-	-	-	Ω
			-4.5	4.5	-	45	130	-	162	-	195	Ω
Maximum On Resistance Between any Two Channels, Δr_{ON}			0	4.5	-	10	-	-	-	-	-	Ω
			-	-	-	-	-	-	-	-	-	Ω
			-4.5	4.5	-	5	-	-	-	-	-	Ω
Switch On/Off Leakage Current, I_{IZ}	For Switch Off: When $V_{IS} = V_{CC}$, $V_{OS} = V_{EE}$; When $V_{IS} = V_{EE}$, $V_{OS} = V_{CC}$ For Switch On: All Applicable Combinations of V_{IS} and V_{OS} Voltage Levels	V_{IL} or V_{IH}										
1 and 2 Channels			0	6	-	-	±0.1	-	±1	-	±1	µA
4053			-5	5	-	-	±0.1	-	±1	-	±1	µA
4 Channels			0	6	-	-	±0.1	-	±1	-	±1	µA
4052			-5	5	-	-	±0.2	-	±2	-	±2	µA
8 Channels			0	6	-	-	±0.2	-	±2	-	±2	µA
4051			-5	5	-	-	±0.4	-	±4	-	±4	µA
Control Input Leakage Current, I_{IL}	-	(Note 4)	-	5.5	-	-	±0.1	-	±1	-	±1	µA
Quiescent Device Current, I_{CC} I_O = 0	When $V_{IS} = V_{EE}$, $V_{OS} = V_{CC}$	V_{CC} or GND	0	5.5	-	-	8	-	80	-	160	µA
	When $V_{IS} = V_{CC}$, $V_{OS} = V_{EE}$		-4.5	5.5	-	-	16	-	160	-	320	µA
Additional Quiescent Device Current Per Input Pin: 1 Unit Load	ΔICC (Note 5)	V_{CC} - 2.1		4.5 to 5.5	-	100	360	-	450	-	490	µA

NOTES:

4. Any voltage between V_{CC} and GND.
5. For dual supply systems theoretical worst case (V_I = 2.4V, V_{CC} = 5.5V) specification is 1.8mA.

HCT Input Loading Table

TYPE	INPUT	UNIT LOADS (NOTE)
4051, 4053	All	0.5
4052	All	0.4

NOTE: Unit load is ΔI_{CC} limit specified in DC Specifications table, e.g., 360mA max. at 25°C.

Switching Specifications V_{CC} = 5V, T_A = 25°C, Input t_r, t_r = 6ns

PARAMETER	C_L (pF)	TYPICAL						UNITS
		4051		4052		4053		
		HC	HCT	HC	HCT	HC	HCT	
Propagation Delay								
Switch IN to OUT, t_{PHL}, t_{PLH}	15	4	4	4	4	4	4	ns
Switch Turn-Off (S or $\overline{E}$), t_{PHZ}, t_{PLZ}	15	19	19	21	21	18	18	ns
Switch Turn-On (S or $\overline{E}$), t_{PZH}, t_{PZL}	15	19	23	27	29	18	20	ns
Power Dissipation Capacitance, C_{PD} (Note 6)	-	50	52	74	76	38	42	pF

NOTE:

6. C_{PD} is used to determine the dynamic power consumption, per package.
   $P_D = C_{PD} V_{CC}^2 f_I + \Sigma (C_L + C_S) V_{CC}^2 f_O$
   f_O = output frequency
   f_I = input frequency
   C_L = output load capacitance
   C_S = switch capacitance
   V_{CC} = supply voltage

Switching Specifications C_L = 50pF, Input t_r, t_r = 6ns

PARAMETER		V_{EE} (V)	V_{CC} (V)	AMBIENT TEMPERATURE, T_A												UNITS
				25°C				-40°C - 85°C				-55°C - 125°C				
				HC		HCT		HC		HCT		HC		HCT		
PARAMETER				MIN	MAX	MIN	MAX	MIN	MAX	MIN	MAX	MIN	MAX	MIN	MAX	UNITS
Propagation Delay, Switch In to Out, t_{PLH}, t_{PHL}		0	2	-	60	-	-	-	75	-	-	-	90	-	-	ns
		0	4.5	-	12	-	12	-	15	-	15	-	18	-	18	ns
		0	6	-	10	-	-	-	13	-	-	-	15	-	-	ns
		-4.5	4.5	-	8	-	8	-	10	-	10	-	12	-	12	ns
Maximum Switch Turn "Off" Delay from S or $\overline{E}$ to Switch Output t_{PHZ}, t_{PLZ}	4051	0	2	-	225	-	-	-	280	-	-	-	340	-	-	ns
		0	4.5	-	45	-	45	-	56	-	56	-	68	-	68	ns
		0	6	-	38	-	-	-	48	-	-	-	57	-	-	ns
		-4.5	4.5	-	32	-	32	-	40	-	40	-	48	-	48	ns
	4052	0	2	-	250	-	-	-	315	-	-	-	375	-	-	ns
		0	4.5	-	50	-	50	-	63	-	63	-	75	-	75	ns
		0	6	-	43	-	-	-	54	-	-	-	65	-	-	ns
		-4.5	4.5	-	38	-	38	-	48	-	48	-	57	-	57	ns
	4053	0	2	-	210	-	-	-	265	-	-	-	315	-	-	ns
		0	4.5	-	42	-	44	-	53	-	55	-	63	-	66	ns
		0	6	-	36	-	-	-	45	-	-	-	54	-	-	ns
		-4.5	4.5	-	29	-	31	-	36	-	39	-	44	-	47	ns

Switching Specifications C_L = 50pF, Input t_r, t_r = 6ns **(Continued)**

PARAMETER		V_{EE} (V)	V_{CC} (V)	AMBIENT TEMPERATURE, T_A												UNITS
				25°C				-40°C - 85°C				-55°C - 125°C				
				HC		HCT		HC		HCT		HC		HCT		
				MIN	MAX	MIN	MAX	MIN	MAX	MIN	MAX	MIN	MAX	MIN	MAX	
Maximum Switch Turn "On" Delay from S or E to Switch Output t_{PZL}, t_{PZH}	4051	0	2	-	225	-	-	-	280	-	-	-	340	-	-	ns
		0	4.5	-	45	-	55	-	56	-	69	-	68	-	83	ns
		0	6	-	38	-	-	-	48	-	-	-	57	-	-	ns
		-4.5	4.5	-	32	-	39	-	40	-	49	-	48	-	59	ns
	4052	0	2	-	325	-	-	-	405	-	-	-	490	-	-	ns
		0	4.5	-	65	-	70	-	81	-	68	-	98	-	105	ns
		0	6	-	55	-	-	-	69	-	-	-	83	-	-	ns
		-4.5	4.5	-	46	-	48	-	58	-	60	-	69	-	72	ns
	4053	0	2	-	220	-	-	-	275	-	-	-	330	-	-	ns
		0	4.5	-	44	-	48	-	55	-	60	-	66	-	72	ns
		0	6	-	37	-	-	-	47	-	-	-	56	-	-	ns
		-4.5	4.5	-	31	-	34	-	39	-	43	-	47	-	51	ns
Input (Control) Capacitance, C_I		-	-	-	10	-	10	-	10	-	10	-	10	-	10	pF

Analog Channel Specifications Typical Values at T_A = 25°C

PARAMETER	TEST CONDITIONS	HC/HCT TYPES	V_{EE} (V)	V_{CC} (V)	HC/ HCT	UNITS
Switch Input Capacitance, C_I		All	-	-	5	pF
Common Output Capacitance, C_{COM}		4051	-	-	25	pF
		4052	-	-	12	pF
		4053	-	-	8	pF
Minimum Switch Frequency Response at -3dB, f_{MAX} (Figures 12, 14, 16)	See Figure 3 (Notes 7, 8)	4051	-2.25	2.25	145	MHz
		4052			165	MHz
		4053			200	MHz
		4051	-4.5	4.5	180	MHz
		4052			185	MHz
		4053			200	MHz

Analog Channel Specifications Typical Values at $T_A = 25^oC$

PARAMETER	TEST CONDITIONS	HC/HCT TYPES	V_{EE} (V)	V_{CC} (V)	HC/ HCT	UNITS
Crosstalk Between any Two Switches (Note 10)	See Figure 4 (Notes 8, 9)	4051	-2.25	2.25	N/A	dB
		4052			(TBE)	dB
		4053			(TBE)	dB
		4051	-4.5	4.5	N/A	dB
		4052			(TBE)	dB
		4053			(TBE)	dB
Sinewave Distortion	See Figure 5	All	-2.25	2.25	0.035	%
		All	-4.5	4.5	0.018	%
$\overline{E}$ or S to Switch Feedthrough Noise	See Figure 6 (Notes 8, 9)	4051	-2.25	2.25	(TBE)	mV
		4052				mV
		4053				mV
		4051	-4.5	4.5	(TBE)	mV
		4052				mV
		4053				mV
Switch “OFF” Signal Feedthrough (Figures 13, 15, 17)	See Figure 7 (Notes 8, 9)	4051	-2.25	2.25	-73	dB
		4052			-65	dB
		4053			-64	dB
		4051	-4.5	4.5	-75	dB
		4052			-67	dB
		4053			-66	dB

NOTES:

7. Adjust input voltage to obtain 0dBm at V_{OS} for f_{IN} = 1MHz.
8. V_{IS} is centered at $(V_{CC} - V_{EE})/2$.
9. Adjust input for 0dBm.
10. Not applicable for HC/HCT4051.

Test Circuits and Waveforms

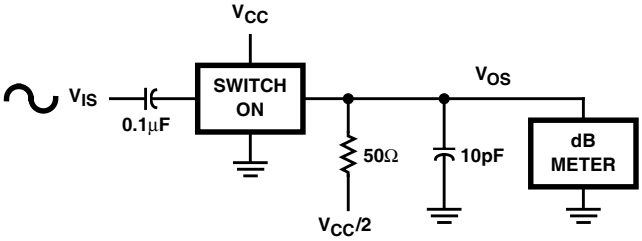

FIGURE 3. FREQUENCY RESPONSE TEST CIRCUIT

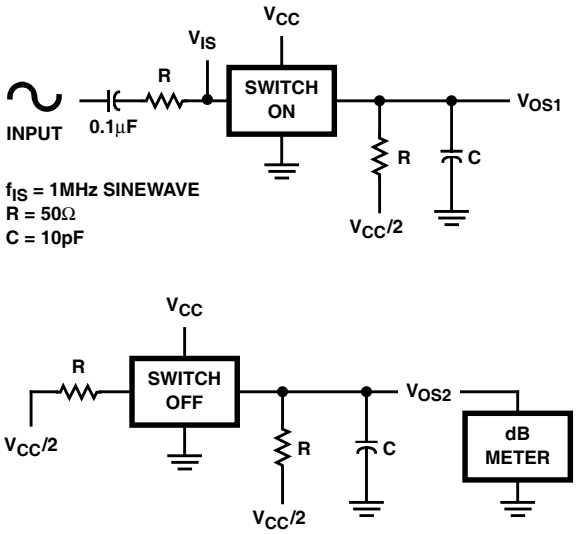

FIGURE 4. CROSSTALK BETWEEN TWO SWITCHES TEST CIRCUIT

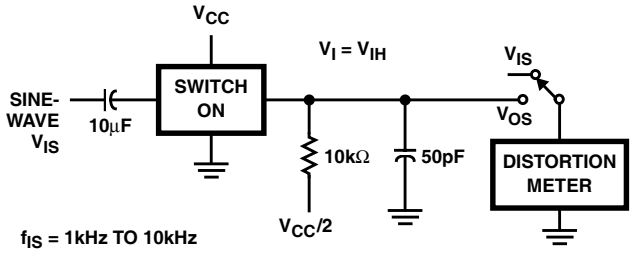

FIGURE 5. SINEWAVE DISTORTION TEST CIRCUIT

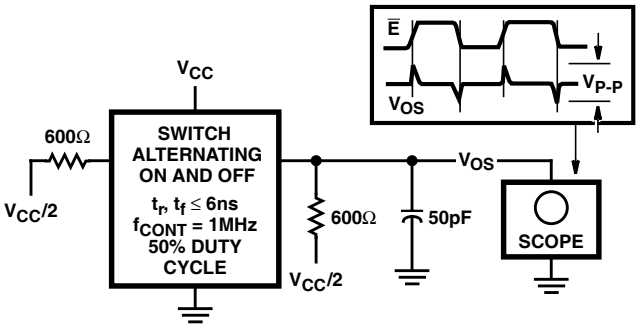

FIGURE 6. CONTROL TO SWITCH FEEDTHROUGH NOISE TEST CIRCUIT

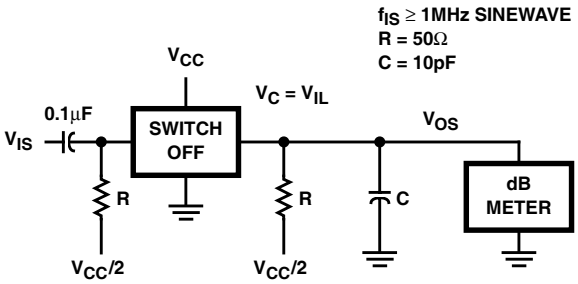

FIGURE 7. SWITCH OFF SIGNAL FEEDTHROUGH

Test Circuits and Waveforms (Continued)

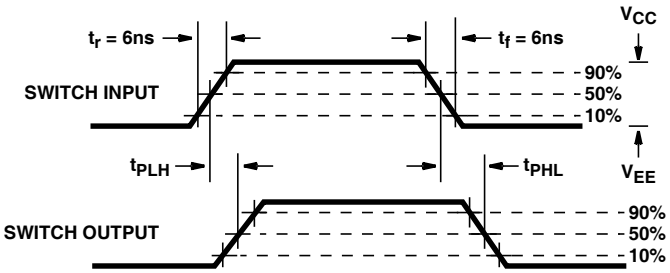

FIGURE 8A.

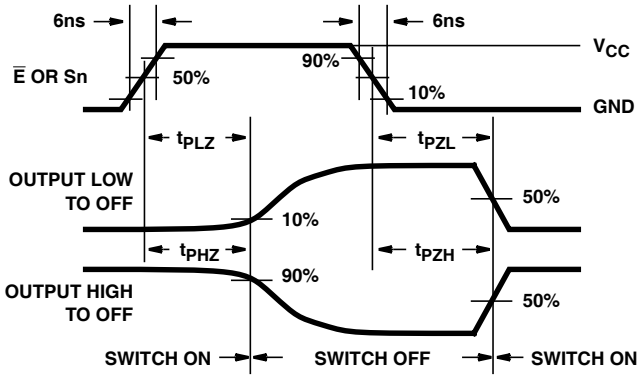

FIGURE 8B. HC TYPES

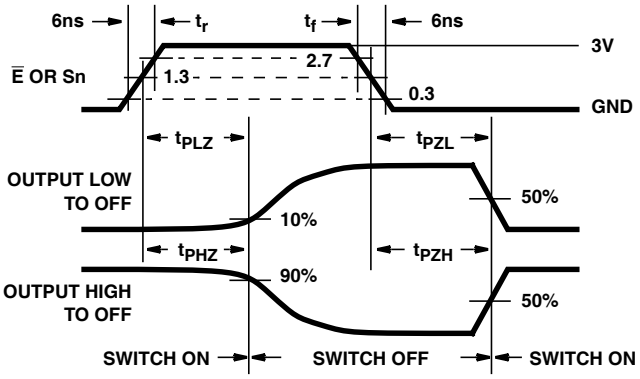

FIGURE 8C. HCT TYPES

FIGURE 8. SWITCH PROPAGATION DELAY, TURN-ON, TURN-OFF TIMES

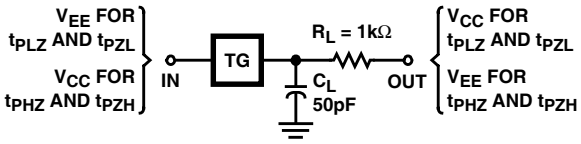

FIGURE 9. SWITCH ON/OFF PROPAGATION DELAY TEST CIRCUIT

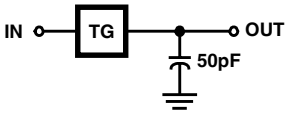

FIGURE 10. SWITCH IN TO SWITCH OUT PROPAGATION DELAY TEST CIRCUIT

Typical Performance Curves

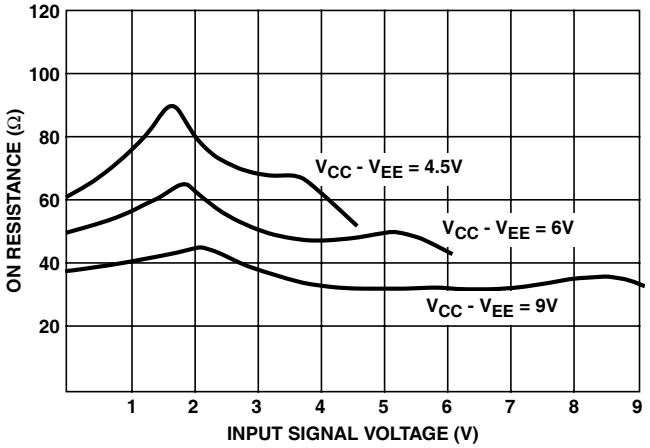

FIGURE 11. TYPICAL ON RESISTANCE vs INPUT SIGNAL VOLTAGE

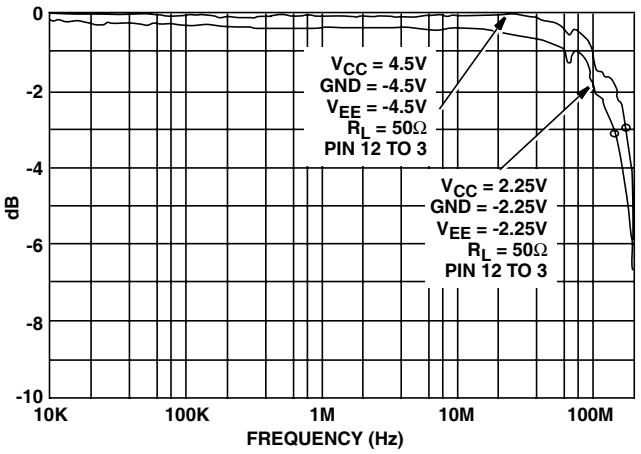

FIGURE 12. CHANNEL ON BANDWIDTH (HC/HCT4051)

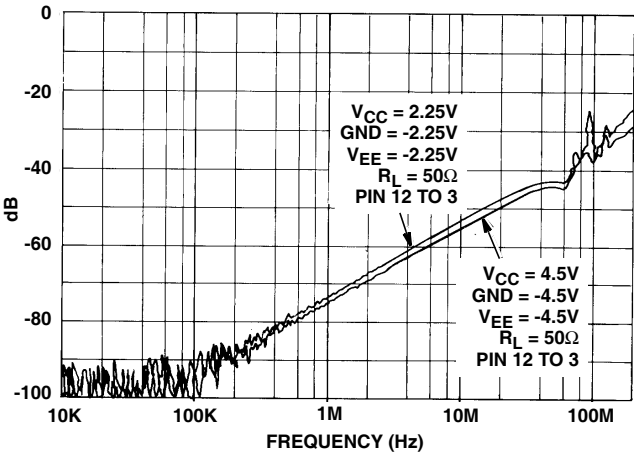

FIGURE 13. CHANNEL OFF FEEDTHROUGH (HC/HCT4051)

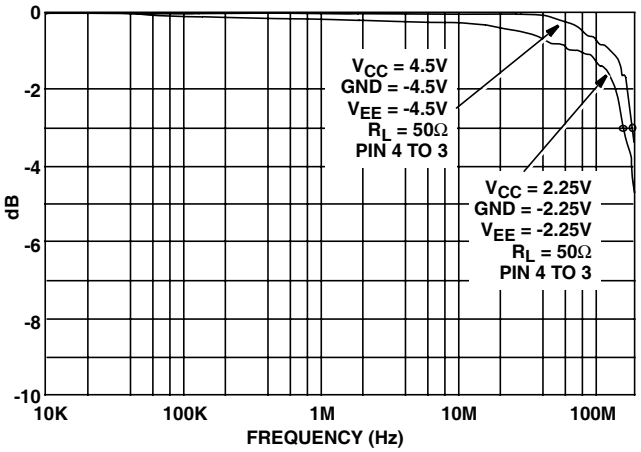

FIGURE 14. CHANNEL ON BANDWIDTH (HC/HCT4052)

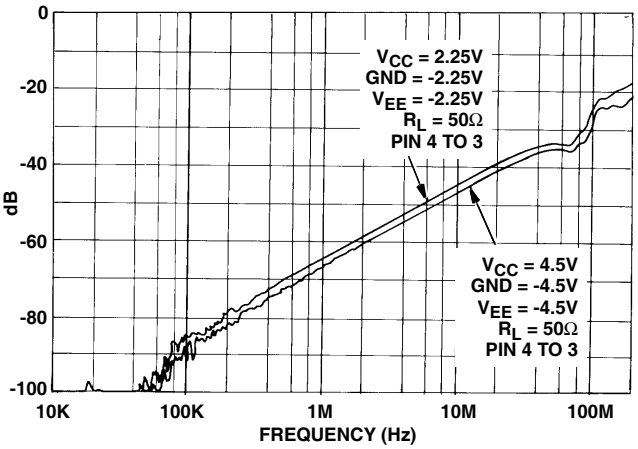

FIGURE 15. CHANNEL OFF FEEDTHROUGH (HC/HCT4052)

Typical Performance Curves (Continued)

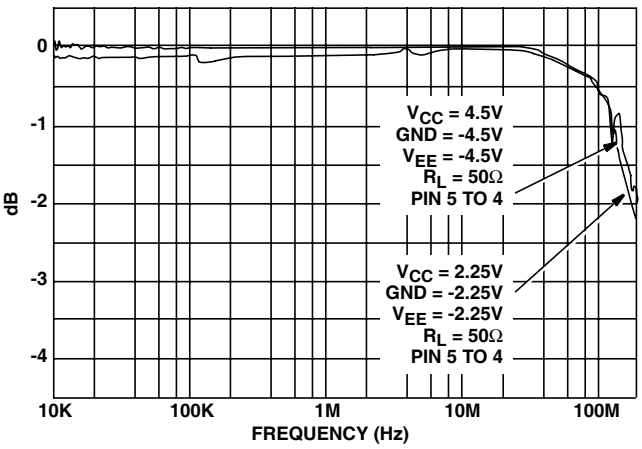

FIGURE 16. CHANNEL ON BANDWIDTH (HC/HCT4053)

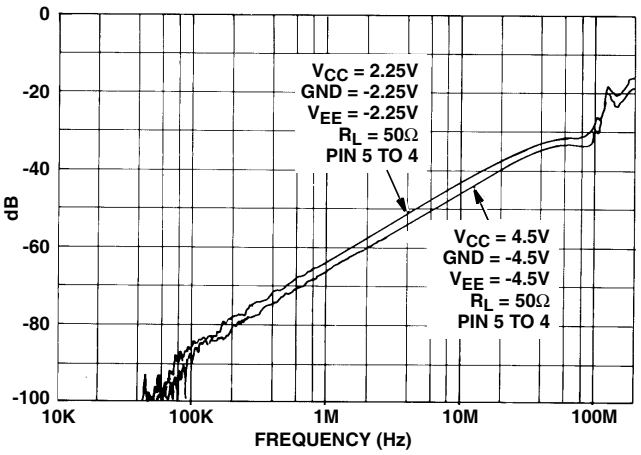

FIGURE 17. CHANNEL OFF FEEDTHROUGH (HC/HCT4053)