- **Operating Voltage Range of 4.5 V to 5.5 V**
- **High-Current 3-State Outputs Drive Bus Lines Directly or Up To 15 LSTTL Loads**
- **Low Power Consumption, 80-μA Max I_{CC}**
- **Typical t_{pd} = 14 ns**
- **±6-mA Output Drive at 5 V**
- **Low Input Current of 1 μA Max**
- **Inputs Are TTL-Voltage Compatible**

SN54HCT245 . . . J OR W PACKAGE
SN74HCT245 . . . DB, DW, N, NS, OR PW PACKAGE
(TOP VIEW)

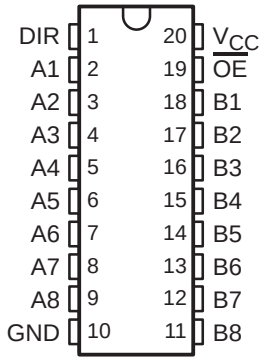

SN54HCT245 . . . FK PACKAGE
(TOP VIEW)

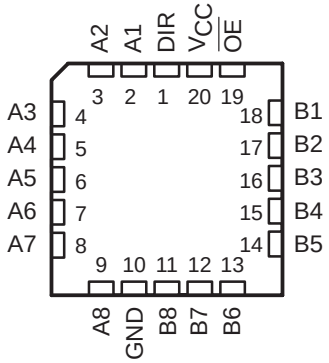

description/ordering information

These octal bus transceivers are designed for asynchronous two-way communication between data buses. The control-function implementation minimizes external timing requirements.

The ’HCT245 devices allow data transmission from the A bus to the B bus or from the B bus to the A bus, depending upon the logic level at the direction-control (DIR) input. The output-enable ($\overline{OE}$) input can be used to disable the device so that the buses are effectively isolated.

ORDERING INFORMATION

T_A	PACKAGE†		ORDERABLE PART NUMBER	TOP-SIDE MARKING
–40°C to 85°C	PDIP – N	Tube of 20	SN74HCT245N	SN74HCT245N
	SOIC – DW	Tube of 25	SN74HCT245DW	HCT245
		Reel of 2000	SN74HCT245DWR	
	SOP – NS	Reel of 2000	SN74HCT245NSR	HCT245
	SSOP – DB	Reel of 2000	SN74HCT245DBR	HT245
	TSSOP – PW	Tube of 70	SN74HCT245PW	HT245
		Reel of 2000	SN74HCT245PWR	
		Reel of 250	SN74HCT245PWT	
–55°C to 125°C	CDIP – J	Tube of 20	SNJ54HCT245J	SNJ54HCT245J
	CFP – W	Tube of 85	SNJ54HCT245W	SNJ54HCT245W
	LCCC – FK	Tube of 55	SNJ54HCT245FK	SNJ54HCT245FK

† Package drawings, standard packing quantities, thermal data, symbolization, and PCB design guidelines are

FUNCTION TABLE

INPUTS		OPERATION
$\overline{OE}$	DIR	
L	L	B data to A bus
L	H	A data to B bus
H	X	Isolation

logic diagram (positive logic)

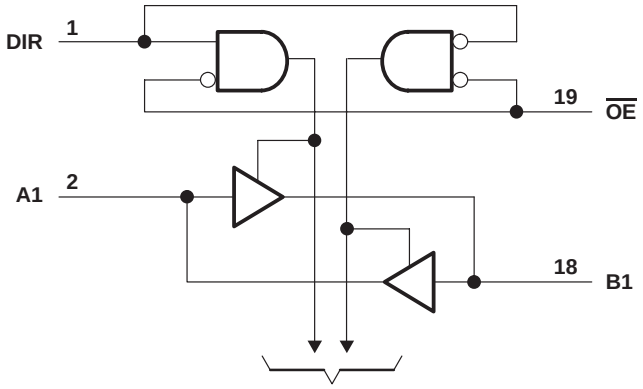

absolute maximum ratings over operating free-air temperature range (unless otherwise noted)†

Supply voltage range, V_{CC}	–0.5 V to 7 V
Input clamp current, I_{IK} ($V_I < 0$ or $V_I > V_{CC}$) (see Note 1)	±20 mA
Output clamp current, I_{OK} ($V_O < 0$ or $V_O > V_{CC}$) (see Note 1)	±20 mA
Continuous output current, I_O ($V_O = 0$ to V_{CC})	±35 mA
Continuous current through V_{CC} or GND	±70 mA
Package thermal impedance, θ_{JA} (see Note 2): DB package	70°C/W
DW package	58°C/W
N package	69°C/W
NS package	60°C/W
PW package	83°C/W
Storage temperature range, T_{stg}	–65°C to 150°C

† Stresses beyond those listed under “absolute maximum ratings” may cause permanent damage to the device. These are stress ratings only, and functional operation of the device at these or any other conditions beyond those indicated under “recommended operating conditions” is not implied. Exposure to absolute-maximum-rated conditions for extended periods may affect device reliability.

NOTES: 1. The input and output voltage ratings may be exceeded if the input and output current ratings are observed.
2. The package thermal impedance is calculated in accordance with JESD 51-7.

recommended operating conditions (see Note 3)

			SN54HCT245			SN74HCT245			UNIT
			MIN	NOM	MAX	MIN	NOM	MAX	
V_{CC}	Supply voltage		4.5	5	5.5	4.5	5	5.5	V
V_{IH}	High-level input voltage	V_{CC} = 4.5 V to 5.5 V	2			2			V
V_{IL}	Low-level input voltage	V_{CC} = 4.5 V to 5.5 V			0.8			0.8	V
V_I	Input voltage		0		V_{CC}	0		V_{CC}	V
V_O	Output voltage		0		V_{CC}	0		V_{CC}	V
$\Delta t/\Delta v$	Input transition rise/fall time				500			500	ns
T_A	Operating free-air temperature		–55		125	–40		85	°C

NOTE 3: All unused inputs of the device must be held at V_{CC} or GND to ensure proper device operation. Refer to the TI application report, *Implications of Slow or Floating CMOS Inputs*, literature number SCBA004.

electrical characteristics over recommended operating free-air temperature range (unless otherwise noted)

PARAMETER		TEST CONDITIONS		V_{CC}	T_A = 25°C			SN54HCT245		SN74HCT245		UNIT
					MIN	TYP	MAX	MIN	MAX	MIN	MAX	
V_{OH}		$V_I = V_{IH}$ or V_{IL}	I_{OH} = –20 µA	4.5 V	4.4	4.499		4.4		4.4		V
			I_{OH} = –6 mA		3.98	4.3		3.7		3.84		
V_{OL}		$V_I = V_{IH}$ or V_{IL}	I_{OL} = 20 µA	4.5 V		0.001	0.1		0.1		0.1	V
			I_{OL} = 6 mA			0.17	0.26		0.4		0.33	
I_I	DIR or $\overline{OE}$	$V_I = V_{CC}$ or 0		5.5 V		±0.1	±100		±1000		±1000	nA
I_{OZ}	A or B	$V_O = V_{CC}$ or 0		5.5 V		±0.01	±0.5		±10		±5	µA
I_{CC}		$V_I = V_{CC}$ or 0, I_O = 0		5.5 V			8		160		80	µA
ΔI_{CC}†		One input at 0.5 V or 2.4 V, Other inputs at 0 or V_{CC}		5.5 V		1.4	2.4		3		2.9	mA
C_i‡	DIR or $\overline{OE}$			4.5 V to 5.5 V		3	10		10		10	pF

† This is the increase in supply current for each input that is at one of the specified TTL voltage levels, rather than 0 V or V_{CC}.
‡ Parameter C_i does not apply to transceiver I/O ports.

switching characteristics over recommended operating free-air temperature range, C_L = 50 pF (unless otherwise noted) (see Figure 1)

PARAMETER	FROM (INPUT)	TO (OUTPUT)	V_{CC}	T_A = 25°C			SN54HCT245		SN74HCT245		UNIT
				MIN	TYP	MAX	MIN	MAX	MIN	MAX	
t_{pd}	A or B	B or A	4.5 V		16	22		33		28	ns
			5.5 V		14	20		30		25	
t_{en}	$\overline{OE}$	A or B	4.5 V		25	46		69		58	ns
			5.5 V		22	41		62		52	
t_{dis}	$\overline{OE}$	A or B	4.5 V		26	40		60		50	ns
			5.5 V		23	36		54		45	
t_t		A or B	4.5 V		9	12		18		15	ns
			5.5 V		8	11		16		14	

switching characteristics over recommended operating free-air temperature range, C_L = 150 pF (unless otherwise noted) (see Figure 1)

PARAMETER	FROM (INPUT)	TO (OUTPUT)	V_{CC}	T_A = 25°C			SN54HCT245		SN74HCT245		UNIT
				MIN	TYP	MAX	MIN	MAX	MIN	MAX	
t_{pd}	A or B	B or A	4.5 V		20	30		45		38	ns
			5.5 V		18	27		41		34	
t_{en}	$\overline{OE}$	A or B	4.5 V		36	59		89		74	ns
			5.5 V		30	53		80		67	
t_t		A or B	4.5 V		17	42		63		53	ns
			5.5 V		14	38		57		48	

operating characteristics, T_A = 25°C

PARAMETER		TEST CONDITIONS	TYP	UNIT
C_{pd}	Power dissipation capacitance per transceiver	No load	40	pF