- **Wide Operating Voltage Range of 2 V to 6 V**
- **Outputs Can Drive Up To 10 LSTTL Loads**
- **Low Power Consumption, 20-μA Max $I_{CC}$**
- **Typical $t_{pd}$ = 8 ns**
- **±4-mA Output Drive at 5 V**
- **Low Input Current of 1 μA Max**

**SN54HC32 . . . J OR W PACKAGE**
**SN74HC32 . . . D, DB, N, NS, OR PW PACKAGE**
**(TOP VIEW)**

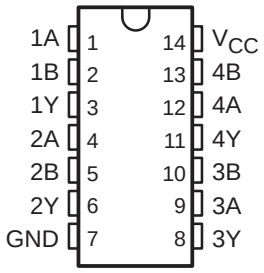


**SN54HC32 . . . FK PACKAGE**
**(TOP VIEW)**

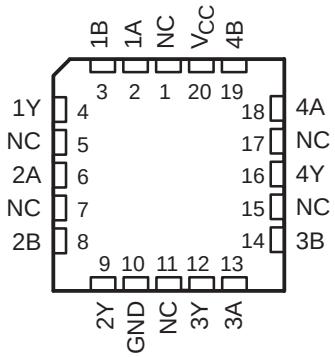


NC – No internal connection

## description/ordering information

The ’HC32 devices contain four independent 2-input OR gates. They perform the Boolean function $Y = \overline{\overline{A} \bullet \overline{B}}$ or $Y = A + B$ in positive logic.

**ORDERING INFORMATION**

| $T_A$ | PACKAGE† | | ORDERABLE PART NUMBER | TOP-SIDE MARKING |
|---|---|---|---|---|
| –40°C to 85°C | PDIP – N | Tube of 25 | SN74HC32N | SN74HC32N |
| | SOIC – D | Tube of 50 | SN74HC32D | HC32 |
| | | Reel of 2500 | SN74HC32DR | |
| | | Reel of 250 | SN74HC32DT | |
| | SOP – NS | Reel of 2000 | SN74HC32NSR | HC32 |
| | SSOP – DB | Reel of 2000 | SN74HC32DBR | HC32 |
| | TSSOP – PW | Tube of 90 | SN74HC32PW | HC32 |
| | | Reel of 2000 | SN74HC32PWR | |
| | | Reel of 250 | SN74HC32PWT | |
| –55°C to 125°C | CDIP – J | Tube of 25 | SNJ54HC32J | SNJ54HC32J |
| | CFP – W | Tube of 150 | SNJ54HC32W | SNJ54HC32W |
| | LCCC – FK | Tube of 55 | SNJ54HC32FK | SNJ54HC32FK |

† Package drawings, standard packing quantities, thermal data, symbolization, and PCB design guidelines are available at www.ti.com/sc/package.

**FUNCTION TABLE**
**(each gate)**

| INPUTS | | OUTPUT |
|---|---|---|
| A | B | Y |
| H | X | H |
| X | H | H |
| L | L | L |

## logic diagram (positive logic)

## absolute maximum ratings over operating free-air temperature range (unless otherwise noted)†

Supply voltage range, $V_{CC}$ . . . . . –0.5 V to 7 V
Input clamp current, $I_{IK}$ ($V_I < 0$ or $V_I > V_{CC}$) (see Note 1) . . . . . ±20 mA
Output clamp current, $I_{OK}$ ($V_O < 0$ or $V_O > V_{CC}$) (see Note 1) . . . . . ±20 mA
Continuous output current, $I_O$ ($V_O = 0$ to $V_{CC}$) . . . . . ±25 mA
Continuous current through $V_{CC}$ or GND . . . . . ±50 mA
Package thermal impedance, $\theta_{JA}$ (see Note 2): D package . . . . . 86°C/W
DB package . . . . . 96°C/W
N package . . . . . 80°C/W
NS package . . . . . 76°C/W
PW package . . . . . 113°C/W
Storage temperature range, $T_{stg}$ . . . . . –65°C to 150°C

† Stresses beyond those listed under “absolute maximum ratings” may cause permanent damage to the device. These are stress ratings only, and functional operation of the device at these or any other conditions beyond those indicated under “recommended operating conditions” is not implied. Exposure to absolute-maximum-rated conditions for extended periods may affect device reliability.

NOTES: 1. The input and output voltage ratings may be exceeded if the input and output current ratings are observed.
2. The package thermal impedance is calculated in accordance with JESD 51-7.

## recommended operating conditions (see Note 3)

| | | | SN54HC32 | | | SN74HC32 | | | UNIT |
|---|---|---|---|---|---|---|---|---|---|
| | | | MIN | NOM | MAX | MIN | NOM | MAX | |
| $V_{CC}$ | Supply voltage | | 2 | 5 | 6 | 2 | 5 | 6 | V |
| $V_{IH}$ | High-level input voltage | $V_{CC}$ = 2 V | 1.5 | | | 1.5 | | | V |
| | | $V_{CC}$ = 4.5 V | 3.15 | | | 3.15 | | | |
| | | $V_{CC}$ = 6 V | 4.2 | | | 4.2 | | | |
| $V_{IL}$ | Low-level input voltage | $V_{CC}$ = 2 V | | | 0.5 | | | 0.5 | V |
| | | $V_{CC}$ = 4.5 V | | | 1.35 | | | 1.35 | |
| | | $V_{CC}$ = 6 V | | | 1.8 | | | 1.8 | |
| $V_I$ | Input voltage | | 0 | | $V_{CC}$ | 0 | | $V_{CC}$ | V |
| $V_O$ | Output voltage | | 0 | | $V_{CC}$ | 0 | | $V_{CC}$ | V |
| $\Delta t/\Delta v$ | Input transition rise/fall time | $V_{CC}$ = 2 V | | | 1000 | | | 1000 | ns |
| | | $V_{CC}$ = 4.5 V | | | 500 | | | 500 | |
| | | $V_{CC}$ = 6 V | | | 400 | | | 400 | |
| $T_A$ | Operating free-air temperature | | –55 | | 125 | –40 | | 85 | °C |

NOTE 3: All unused inputs of the device must be held at $V_{CC}$ or GND to ensure proper device operation. Refer to the TI application report, *Implications of Slow or Floating CMOS Inputs*, literature number SCBA004.

## electrical characteristics over recommended operating free-air temperature range (unless otherwise noted)

| PARAMETER | TEST CONDITIONS | | $V_{CC}$ | $T_A$ = 25°C | | | SN54HC32 | | SN74HC32 | | UNIT |
|---|---|---|---|---|---|---|---|---|---|---|---|
| | | | | MIN | TYP | MAX | MIN | MAX | MIN | MAX | |
| $V_{OH}$ | $V_I = V_{IH}$ or $V_{IL}$ | $I_{OH}$ = –20 µA | 2 V | 1.9 | 1.998 | | 1.9 | | 1.9 | | V |
| | | | 4.5 V | 4.4 | 4.499 | | 4.4 | | 4.4 | | |
| | | | 6 V | 5.9 | 5.999 | | 5.9 | | 5.9 | | |
| | | $I_{OH}$ = –4 mA | 4.5 V | 3.98 | 4.3 | | 3.7 | | 3.84 | | |
| | | $I_{OH}$ = –5.2 mA | 6 V | 5.48 | 5.8 | | 5.2 | | 5.34 | | |
| $V_{OL}$ | $V_I = V_{IH}$ or $V_{IL}$ | $I_{OL}$ = 20 µA | 2 V | | 0.002 | 0.1 | | 0.1 | | 0.1 | V |
| | | | 4.5 V | | 0.001 | 0.1 | | 0.1 | | 0.1 | |
| | | | 6 V | | 0.001 | 0.1 | | 0.1 | | 0.1 | |
| | | $I_{OL}$ = 4 mA | 4.5 V | | 0.17 | 0.26 | | 0.4 | | 0.33 | |
| | | $I_{OL}$ = 5.2 mA | 6 V | | 0.15 | 0.26 | | 0.4 | | 0.33 | |
| $I_I$ | $V_I = V_{CC}$ or 0 | | 6 V | | ±0.1 | ±100 | | ±1000 | | ±1000 | nA |
| $I_{CC}$ | $V_I = V_{CC}$ or 0, | $I_O$ = 0 | 6 V | | | 2 | | 40 | | 20 | µA |
| $C_i$ | | | 2 V to 6 V | | 3 | 10 | | 10 | | 10 | pF |

## switching characteristics over recommended operating free-air temperature range, $C_L$ = 50 pF (unless otherwise noted) (see Figure 1)

| PARAMETER | FROM (INPUT) | TO (OUTPUT) | $V_{CC}$ | $T_A$ = 25°C | | | SN54HC32 | | SN74HC32 | | UNIT |
|---|---|---|---|---|---|---|---|---|---|---|---|
| | | | | MIN | TYP | MAX | MIN | MAX | MIN | MAX | |
| $t_{pd}$ | A or B | Y | 2 V | | 50 | 100 | | 150 | | 125 | ns |
| | | | 4.5 V | | 10 | 20 | | 30 | | 25 | |
| | | | 6 V | | 8 | 17 | | 25 | | 21 | |
| $t_t$ | | Y | 2 V | | 38 | 75 | | 110 | | 95 | ns |
| | | | 4.5 V | | 8 | 15 | | 22 | | 19 | |
| | | | 6 V | | 6 | 13 | | 19 | | 16 | |

## operating characteristics, $T_A$ = 25°C

| PARAMETER | | TEST CONDITIONS | TYP | UNIT |
|---|---|---|---|---|
| $C_{pd}$ | Power dissipation capacitance per gate | No load | 20 | pF |