- 15-V Digital or ±7.5-V Peak-to-Peak Switching
- 125-Ω Typical On-State Resistance for 15-V Operation
- Switch On-State Resistance Matched to Within 5 Ω Over 15-V Signal-Input Range
- On-State Resistance Flat Over Full Peak-to-Peak Signal Range
- High On/Off Output-Voltage Ratio: 80 dB Typical at f_{is} = 10 kHz, R_L = 1 kΩ
- High Degree of Linearity: <0.5% Distortion Typical at f_{is} = 1 kHz, V_{is} = 5 V p-p, $V_{DD} - V_{SS} \geq$ 10 V, R_L = 10 kΩ
- Extremely Low Off-State Switch Leakage, Resulting in Very Low Offset Current and High Effective Off-State Resistance: 10 pA Typical at $V_{DD} - V_{SS}$ = 10 V, T_A = 25°C
- Extremely High Control Input Impedance (Control Circuit Isolated From Signal Circuit): 10^{12} Ω Typical
- Low Crosstalk Between Switches: –50 dB Typical at f_{is} = 8 MHz, R_L = 1 kΩ
- Matched Control-Input to Signal-Output Capacitance: Reduces Output Signal Transients
- Frequency Response, Switch On = 40 MHz Typical
- 100% Tested for Quiescent Current at 20 V
- 5-V, 10-V, and 15-V Parametric Ratings
- Meets All Requirements of JEDEC Tentative Standard No. 13-B, *Standard Specifications for Description of "B" Series CMOS Devices*
- Applications:
  - Analog Signal Switching/Multiplexing: Signal Gating, Modulator, Squelch Control, Demodulator, Chopper, Commutating Switch
  - Digital Signal Switching/Multiplexing
  - Transmission-Gate Logic Implementation
  - Analog-to-Digital and Digital-to-Analog Conversion
  - Digital Control of Frequency, Impedance, Phase, and Analog-Signal Gain

E, F, M, NS, OR PW PACKAGE
(TOP VIEW)

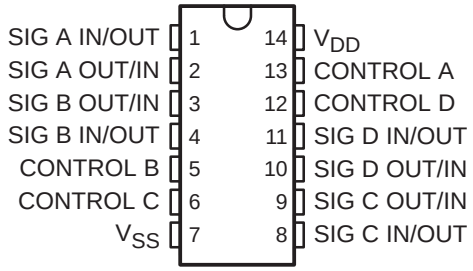

description/ordering information (continued)

ORDERING INFORMATION

T_A	PACKAGE†		ORDERABLE PART NUMBER	TOP-SIDE MARKING
–55°C to 125°C	CDIP – F	Tube of 25	CD4066BF3A	CD4066BF3A
	PDIP – E	Tube of 25	CD4066BE	CD4066BE
	SOIC – M	Tube of 50	CD4066BM	CD4066BM
		Reel of 2500	CD4066BM96	
		Reel of 250	CD4066BMT	
	SOP – NS	Reel of 2000	CD4066BNSR	CD4066B
	TSSOP – PW	Tube of 90	CD4066BPW	CM066B
		Reel of 2000	CD4066BPWR	

† Package drawings, standard packing quantities, thermal data, symbolization, and PCB design guidelines are available at www.ti.com/sc/package.

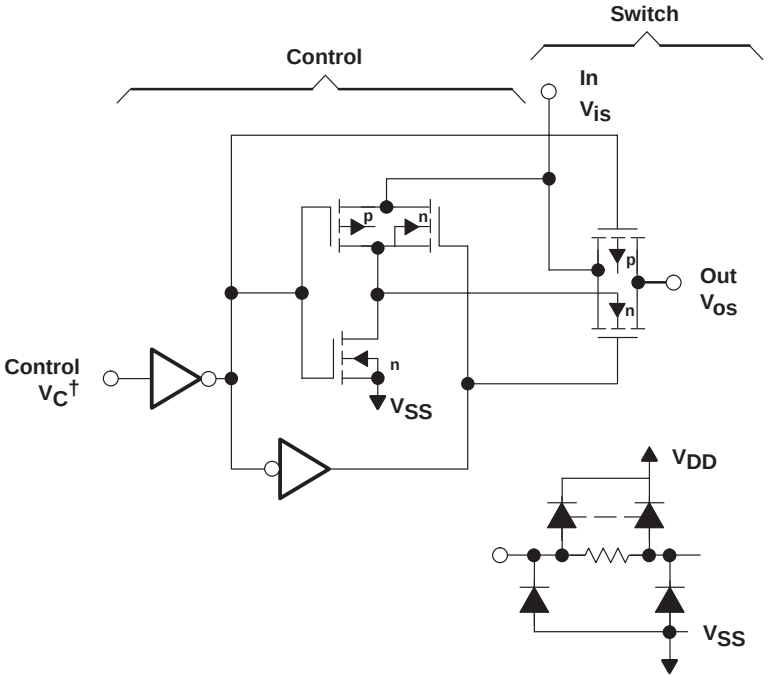

† All control inputs are protected by the CMOS protection network.

NOTES: A. All p substrates are connected to V_{DD}.
B. Normal operation control-line biasing: switch on (logic 1), $V_C = V_{DD}$; switch off (logic 0), $V_C = V_{SS}$
C. Signal-level range: $V_{SS} \le V_{is} \le V_{DD}$

92CS-29113

Figure 1. Schematic Diagram of One-of-Four Identical Switches and Associated Control Circuitry

absolute maximum ratings over operating free-air temperature (unless otherwise noted)†

DC supply-voltage range, V_{DD} (voltages referenced to V_{SS} terminal) . . . . . –0.5 V to 20 V
Input voltage range, V_{is} (all inputs) . . . . . –0.5 V to V_{DD} + 0.5 V
DC input current, I_{IN} (any one input) . . . . . ±10 mA
Package thermal impedance, θ_{JA} (see Note 1): E package . . . . . 80°C/W
M package . . . . . 86°C/W
NS package . . . . . 76°C/W
PW package . . . . . 113°C/W
Lead temperature (during soldering):
At distance 1/16 ± 1/32 inch (1,59 ± 0,79 mm) from case for 10 s max . . . . . 265°C
Storage temperature range, T_{stg} . . . . . –65°C to 150°C

† Stresses beyond those listed under “absolute maximum ratings” may cause permanent damage to the device. These are stress ratings only, and functional operation of the device at these or any other conditions beyond those indicated under “recommended operating conditions” is not implied. Exposure to absolute-maximum-rated conditions for extended periods may affect device reliability.
NOTE 1: The package thermal impedance is calculated in accordance with JESD 51-7.

recommended operating conditions

		MIN	MAX	UNIT
V_{DD}	Supply voltage	3	18	V
T_A	Operating free-air temperature	–55	125	°C

electrical characteristics

PARAMETER		TEST CONDITIONS	V_{IN} (V)	V_{DD} (V)	LIMITS AT INDICATED TEMPERATURES –55°C	–40°C	85°C	125°C	25°C TYP	25°C MAX	UNIT
I_{DD}	Quiescent device current		0, 5	5	0.25	0.25	7.5	7.5	0.01	0.25	µA
			0, 10	10	0.5	0.5	15	15	0.01	0.5	
			0, 15	15	1	1	30	30	0.01	1	
			0, 20	20	5	5	150	150	0.02	5	
Signal Inputs (V_{is}) and Outputs (V_{os})											
r_{on}	On-state resistance (max)	$V_C = V_{DD}$, R_L = 10 kΩ returned to $\frac{(V_{DD} - V_{SS})}{2}$, $V_{is} = V_{SS}$ to V_{DD}		5	800	850	1200	1300	470	1050	Ω
				10	310	330	500	550	180	400	
				15	200	210	300	320	125	240	
Δr_{on}	On-state resistance difference between any two switches	R_L = 10 kΩ, $V_C = V_{DD}$		5					15		Ω
				10					10		
				15					5		
THD	Total harmonic distortion	$V_C = V_{DD}$ = 5 V, V_{SS} = –5 V, $V_{is(p-p)}$ = 5 V (sine wave centered on 0 V), R_L = 10 kΩ, f_{is} = 1-kHz sine wave							0.4		%
	–3-dB cutoff frequency (switch on)	$V_C = V_{DD}$ = 5 V, V_{SS} = –5 V, $V_{is(p-p)}$ = 5 V (sine wave centered on 0 V), R_L = 1 kΩ							40		MHz
	–50-dB feedthrough frequency (switch off)	$V_C = V_{SS}$ = –5 V, $V_{is(p-p)}$ = 5 V (sine wave centered on 0 V), R_L = 1 kΩ							1		MHz
I_{is}	Input/output leakage current (switch off) (max)	V_C = 0 V, V_{is} = 18 V, V_{os} = 0 V; and V_C = 0 V, V_{is} = 0 V, V_{os} = 18 V		18	±0.1	±0.1	±1	±1	$\pm 10^{-5}$	±0.1	µA
	–50-dB crosstalk frequency	$V_C(A) = V_{DD}$ = 5 V, $V_C(B) = V_{SS}$ = –5 V, $V_{is}(A)$ = 5 V_{p-p}, 50-Ω source, R_L = 1 kΩ							8		MHz
t_{pd}	Propagation delay (signal input to signal output)	R_L = 200 kΩ, $V_C = V_{DD}$, V_{SS} = GND, C_L = 50 pF, V_{is} = 10 V (square wave centered on 5 V), t_r, t_f = 20 ns		5					20	40	ns
				10					10	20	
				15					7	15	
C_{is}	Input capacitance	V_{DD} = 5 V, $V_C = V_{SS}$ = –5 V							8		pF
C_{os}	Output capacitance	V_{DD} = 5 V, $V_C = V_{SS}$ = –5 V							8		pF
C_{ios}	Feedthrough	V_{DD} = 5 V, $V_C = V_{SS}$ = –5 V							0.5		pF

electrical characteristics (continued)

CHARACTERISTIC		TEST CONDITIONS	V_{DD} (V)	LIMITS AT INDICATED TEMPERATURES						UNIT
				–55°C	–40°C	85°C	125°C	25°C TYP	25°C MAX	
Control (V_C)										
V_{ILC}	Control input, low voltage (max)	$\|I_{is}\| < 10\ \mu A$, $V_{is} = V_{SS}$, $V_{OS} = V_{DD}$, and $V_{is} = V_{DD}$, $V_{OS} = V_{SS}$	5	1	1	1	1		1	V
			10	2	2	2	2		2	
			15	2	2	2	2		2	
V_{IHC}	Control input, high voltage	See Figure 6	5	3.5 (MIN)						V
			10	7 (MIN)						
			15	11 (MIN)						
I_{IN}	Input current (max)	$V_{is} \le V_{DD}$, $V_{DD} - V_{SS} = 18$ V, $V_{CC} \le V_{DD} - V_{SS}$	18	±0.1	±0.1	±1	±1	$\pm 10^{-5}$	±0.1	μA
	Crosstalk (control input to signal output)	$V_C = 10$ V (square wave), t_r, $t_f = 20$ ns, $R_L = 10\ k\Omega$	10					50		mV
	Turn-on and turn-off propagation delay	$V_{IN} = V_{DD}$, t_r, $t_f = 20$ ns, $C_L = 50$ pF, $R_L = 1\ k\Omega$	5					35	70	ns
			10					20	40	
			15					15	30	
	Maximum control input repetition rate	$V_{is} = V_{DD}$, V_{SS} = GND, $R_L = 1\ k\Omega$ to GND, $C_L = 50$ pF, $V_C = 10$ V (square wave centered on 5 V), t_r, $t_f = 20$ ns, $V_{OS} = 1/2\ V_{OS}$ at 1 kHz	5					6		MHz
			10					9		
			15					9.5		
C_I	Input capacitance							5	7.5	pF

switching characteristics

V_{DD} (V)	SWITCH INPUT						SWITCH OUTPUT, V_{OS} (V)	
	V_{is} (V)	I_{is} (mA)						
		–55°C	–40°C	25°C	85°C	125°C	MIN	MAX
5	0	0.64	0.61	0.51	0.42	0.36		0.4
5	5	–0.64	–0.61	–0.51	–0.42	–0.36	4.6	
10	0	1.6	1.5	1.3	1.1	0.9		0.5
10	10	–1.6	–1.5	–1.3	–1.1	–0.9	9.5	
15	0	4.2	4	3.4	2.8	2.4		1.5
15	15	–4.2	–4	–3.4	–2.8	–2.4	13.5	

TYPICAL CHARACTERISTICS

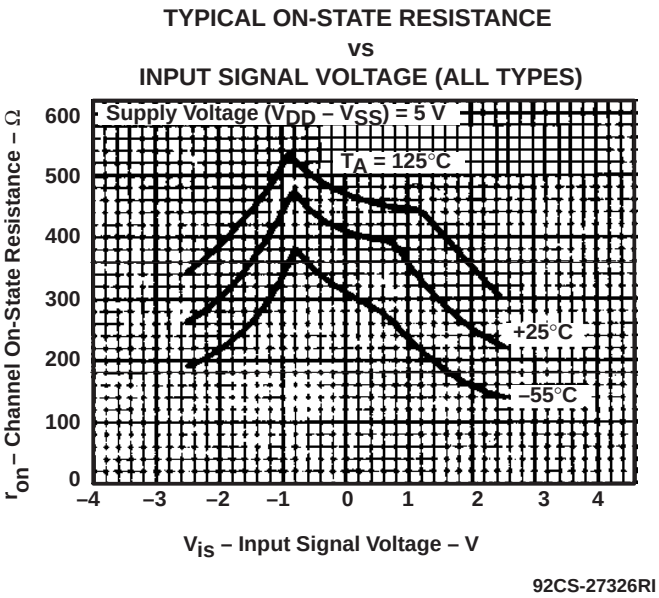

Figure 2

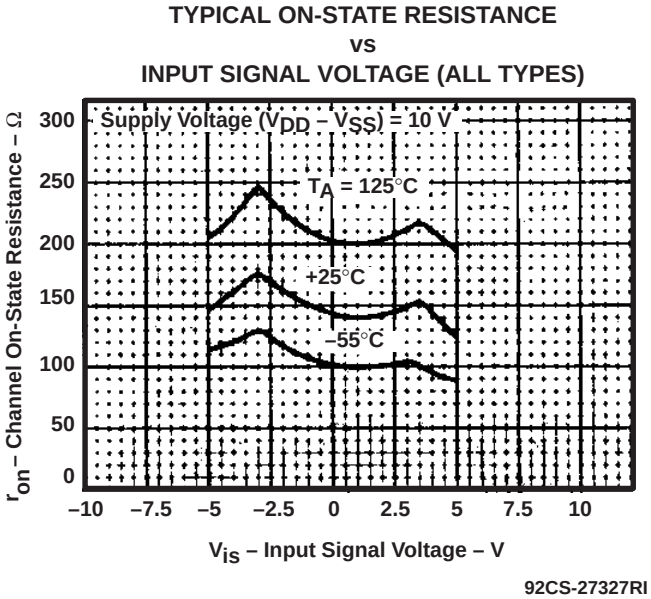

Figure 3

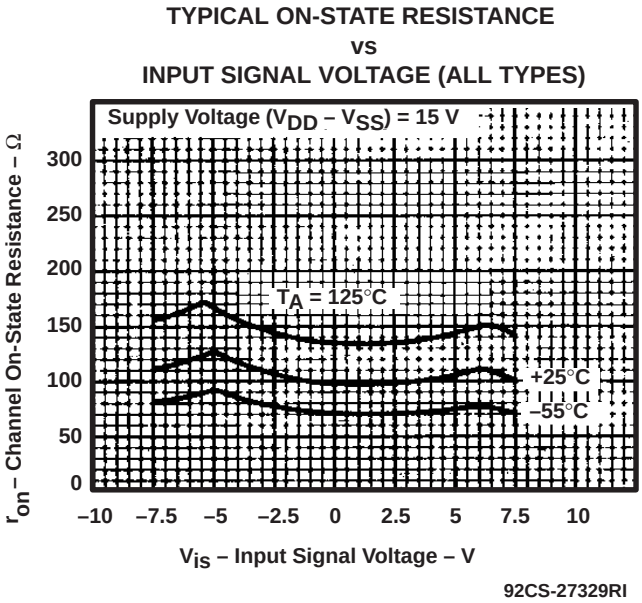

Figure 4

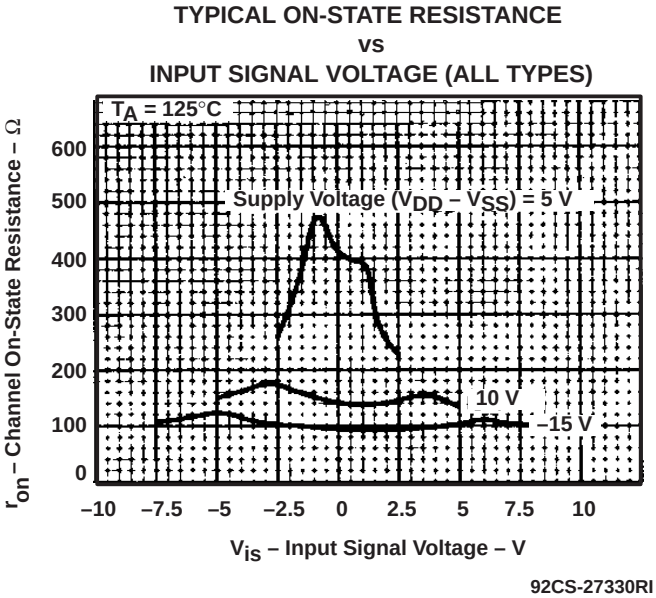

Figure 5