LM101A - LM201A
LM301A

SINGLE OPERATIONAL AMPLIFIER

	LM101A LM201A	LM301A
■ INPUT OFFSET VOLTAGE	0.7mV	2mV
■ INPUT BIAS CURRENT	25nA	70nA
■ INPUT OFFSET CURRENT	1.5nA	2nA
■ SLEW RATE AS INVERTING AMPLIFIER	10V/µs	10V/µs

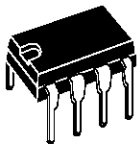

N
DIP8
(Plastic Package)

D
SO8
(Plastic Micropackage)

DESCRIPTION

The LM101A is a general-purpose operational amplifier which offers many features : supply voltages from ±5V to ±22V, low current drain, overload protection on the input and output, no latch-up when the common-mode range is exceeded, free from oscillations and compensation with a single 30pF capacitor. It has advantages over internally compensated amplifiers in that the compensation can be tailored to the particular application : slew rate of 10V/µs and bandwidth of 3.5MHz can be easily achieved.

ORDER CODES

Part Number	Temperature Range	Package N	Package D
LM101A	-55°C, +125°C	•	•
LM201A	-40°C, +105°C	•	•
LM301A	0°C, +70°C	•	•

Example : LM201AN

PIN CONNECTIONS (top view)

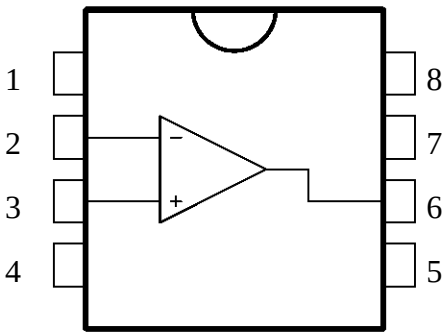

1 - Balance - compensation 1
2 - Inverting input
3 - Non-inverting input
4 - V_{CC-}
5 - Balance
6 - Output
7 - V_{CC+}
8 - Compensation 2

SCHEMATIC DIAGRAM

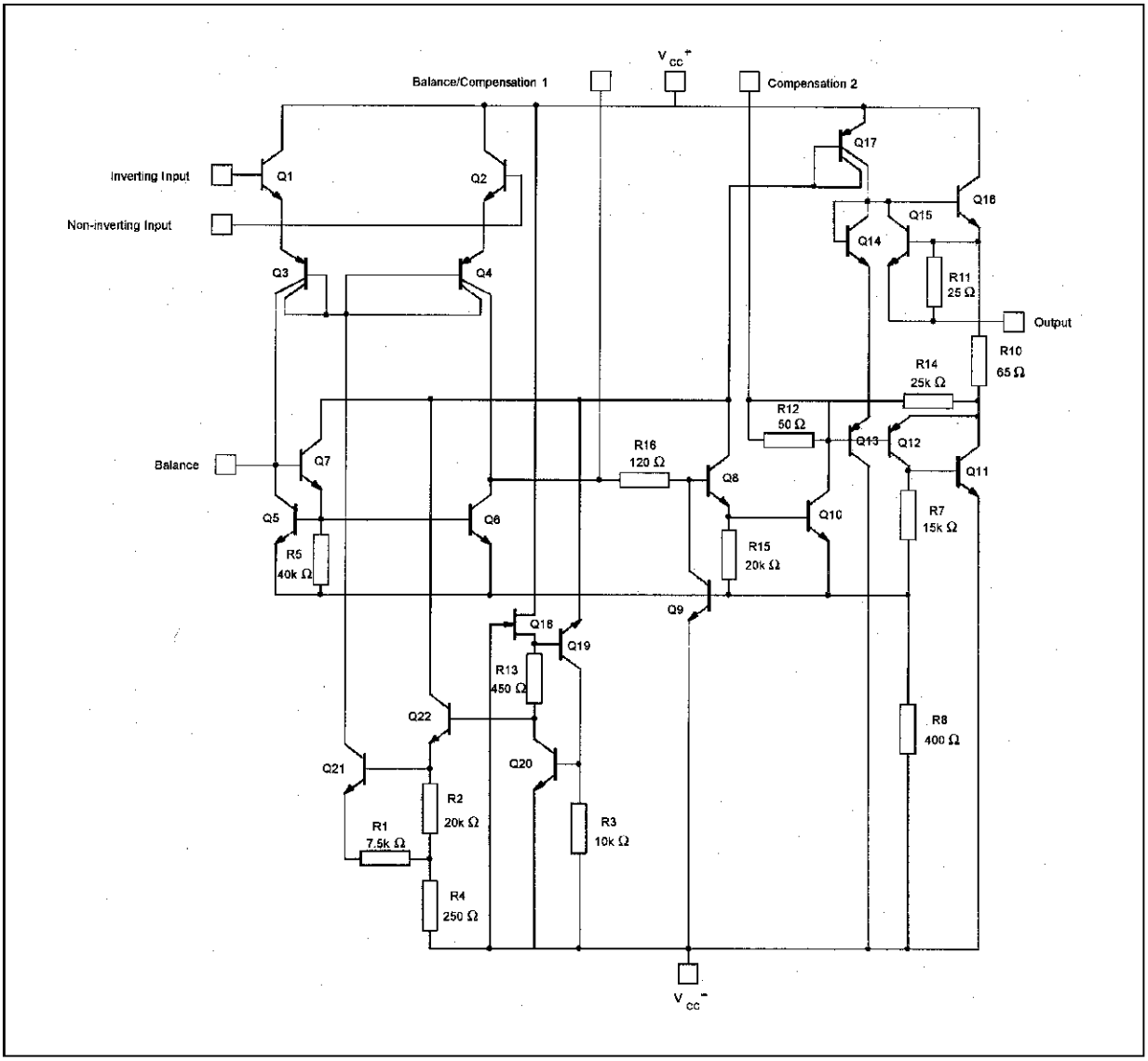

ABSOLUTE MAXIMUM RATINGS

Symbol	Parameter	LM101A	LM201A	LM301A	Unit
V_{cc}	Supply Voltage	±22			V
V_{id}	Differential Input Voltage	±30			V
V_i	Input Voltage	±15			V
P_{tot}	Power Dissipation N Suffix D Suffix	500 300			mW
	Output Short-circuit Duration	Infinite			
T_{oper}	Operating Free Air Temperature Range	-55 to +125	-40 to +105	0 to +70	°C
T_{stg}	Storage Temperature Range	-65 to +150	-65 to +150	-65 to +150	°C

ELECTRICAL CHARACTERISTICS

LM301A	$0^oC < T_{amb} < +70^oC$	$\pm5V \leq V_{CC} \leq \pm20V$	C1 = 30pF
LM201A	$-40^oC < T_{amb} < +105^oC$	$\pm5V \leq V_{CC} \leq \pm20V$	C1 = 30pF
LM101A	$-55^oC < T_{amb} < +125^oC$	$\pm5V \leq V_{CC} \leq \pm20V$	C1 = 30pF

Symbol	Parameter	LM101A - LM201A			LM301A			Unit
		Min.	Typ.	Max.	Min.	Typ.	Max.	
V_{io}	Input Offset Voltage ($R_S \leq 10k\Omega$) $T_{amb} = +25^oC$ $T_{min.} \leq T_{amb} \leq T_{max.}$		0.7	2 3		2	7.5 10	mV
DV_{io}	Input Offset Voltage Drift $T_{min.} \leq T_{amb} \leq T_{max.}$		3	15		6	30	$\mu V/^oC$
I_{ib}	Input Bias Current $T_{amb} = +25^oC$ $T_{min.} \leq T_{amb} \leq T_{max.}$		25	75 100		70	250 300	nA
I_{io}	Input Offset Current $T_{amb} = +25^oC$ $T_{min.} \leq T_{amb} \leq T_{max.}$		1.5	10 20		2	50 70	nA
DI_{io}	Input Offset Current Drift $25^oC \leq T_{amb} \leq T_{max.}$ $T_{min.} \leq T_{amb} \leq T_{max.}$		10 20	100 200		10 20	300 600	$pA/^oC$
A_{vd}	Large Signal Voltage Gain * ($V_O \leq 10V$, $R_L = 2k\Omega$) $T_{amb} = +25^oC$ $T_{min.} \leq T_{amb} \leq T_{max.}$	 50 25	100		 25 15	100		V/mV
SVR	Supply Voltage Rejection Ratio ($R_S \leq 10k\Omega$) $T_{amb} = +25^oC$ $T_{min.} \leq T_{amb} \leq T_{max.}$	 80 80	96		 70 70	96		dB
I_{CC}	Supply Current, no load $T_{amb} = +25^oC$ $T_{min.} \leq T_{amb} \leq T_{max.}$		1.8	3 3		1.8	3 3	mA
V_{icm}	Input Common Mode Voltage Range ($V_{CC} = \pm20V$) $T_{amb} = +25^oC$ $T_{min.} \leq T_{amb} \leq T_{max.}$	 ±15 ±15			 ±15 ±15			V
CMR	Common-mode Rejection Ratio ($R_S \leq 10k\Omega$) $T_{amb} = +25^oC$ $T_{min.} \leq T_{amb} \leq T_{max.}$	 80 80	96		 70 70	96		dB
I_{OS}	Output Short-circuit Current * $T_{amb} = +25^oC$	10	30	50	10	30	50	mA
$\pm V_{OPP}$	Output Voltage Swing * $T_{amb} = +25^oC$ $R_L = 10k\Omega$ $R_L = 2k\Omega$ $T_{min.} \leq T_{amb} \leq T_{max.}$ $R_L = 10k\Omega$ $R_L = 2k\Omega$	 12 10 12 10	 14 13		 12 10 12 10	 14 13		V

ELECTRICAL CHARACTERISTICS (continued)

Symbol	Parameter	LM101A - LM201A			LM301A			Unit
		Min.	Typ.	Max.	Min.	Typ.	Max.	
SR	Slew Rate (V_i = ±10V, R_L =2kΩ, C_L= 100pF, T_{amb} = 25°C, unity gain) - (note 1) *	0.25	0.5		0.25	0.5		V/µs
t_r	Rise Time (V_i = ±20µV, R_L = 2kΩ, C_L = 100pF, T_{amb} = 25°C, unity gain) *		0.3			0.3		µs
K_{OV}	Overshoot (V_i = 20mV, R_L = 2kΩ, CL = 100pF, T_{amb} = 25°C, unity gain)		5			5		%
Z_i	Input Impedance *	1.5	4		1.5	4		MΩ
R_o	Output Resistance *		75			75		Ω
GBP	Gain Bandwidth Product * (V_i = 10mV, R_L = 2kΩ, C_L= 100pF, f = 100kHz, T_{amb} = 25°C)	0.5	1		0.5	1		MHz
THD	Total Harmonic Distortion (f = 1kHz, A_V = 20dB, R_L =2kΩ, V_O = $2V_{PP}$, C_L = 100pF, T_{amb} = 25°C)		0.015			0.015		%
e_n	Equivalent Input Noise Voltage (f = 1kHz, R_s = 100Ω)		25			25		$\frac{nV}{\sqrt{Hz}}$

Notes : 1. May be improved up to 10V/µs in inverting amplifier configuration
*** => V_{CC}** = ±15V T_{amb} = +25°C (unless otherwise specified)

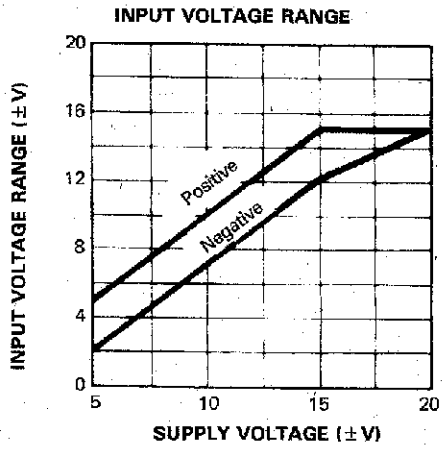

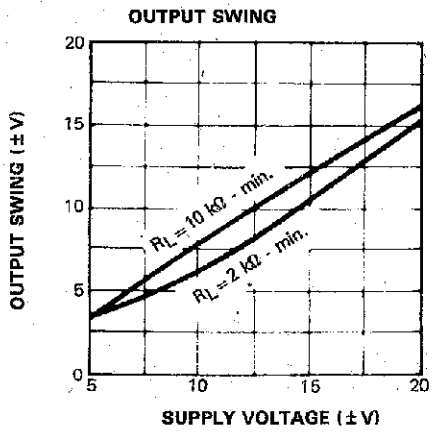

VOLTAGE GAIN

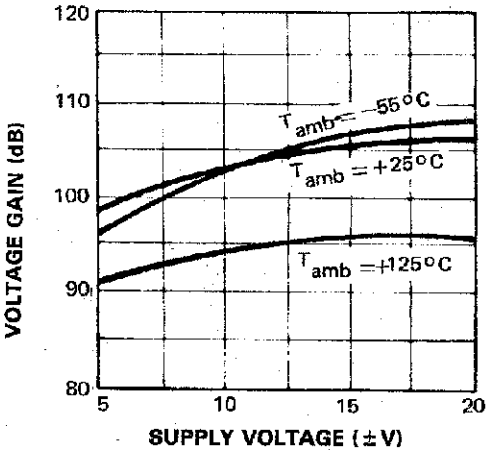

SUPPLY CURRENT

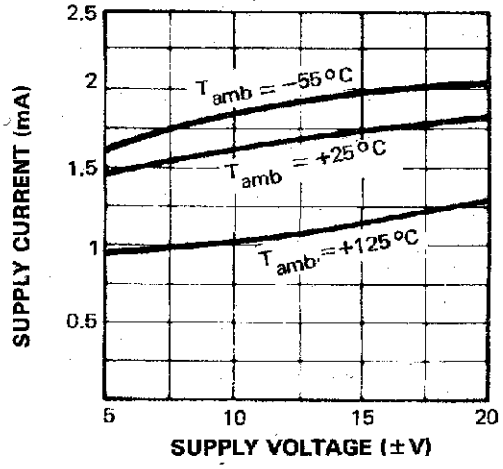

INPUT NOISE VOLTAGE

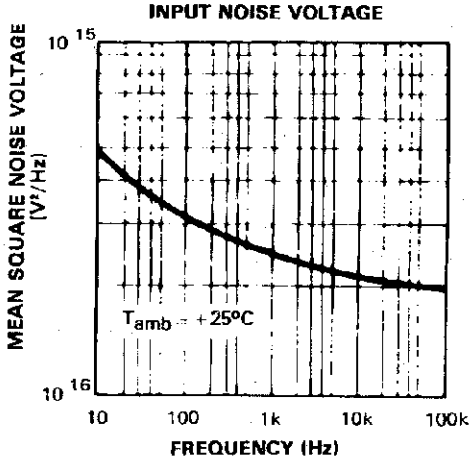

CURRENT LIMITING

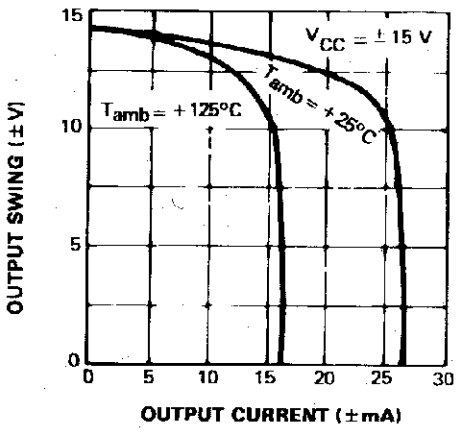

SINGLE POLE COMPENSATION

OPEN LOOP FREQUENCY RESPONSE

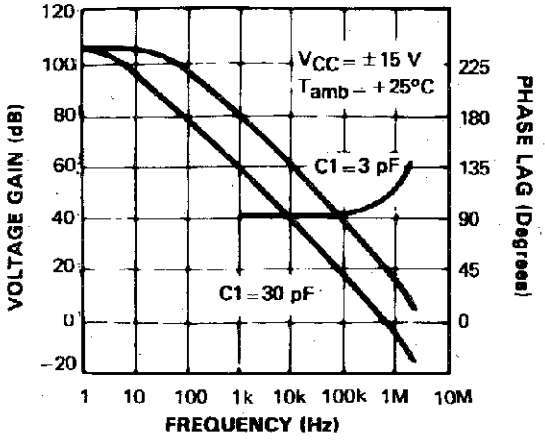

FEED FORWARD COMPENSATION

OPEN LOOP FREQUENCY RESPONSE

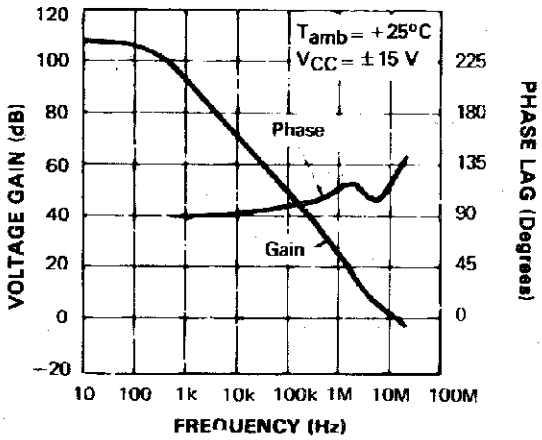

SINGLE POLE COMPENSATION

LARGE SIGNAL FREQUENCY RESPONSE

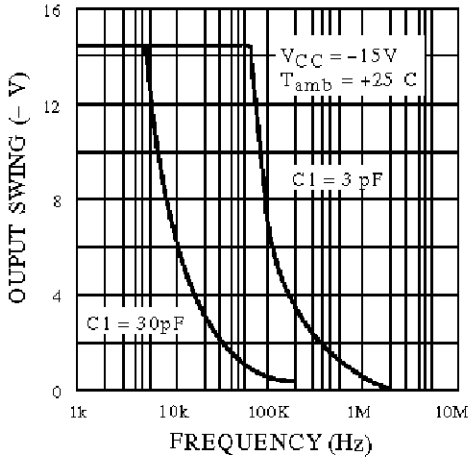

FEED FORWARD COMPENSATION

LARGE SIGNAL FREQUENCY RESPONSE

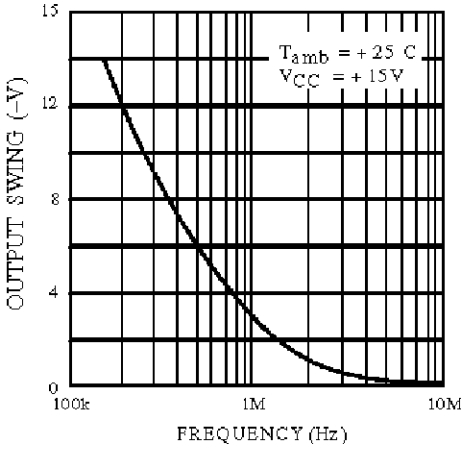

VOLTAGE FOLLOWER PULSE RESPONSE

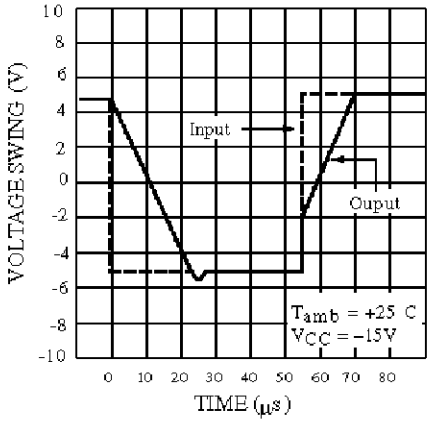

INVERTER PULSE RESPONSE

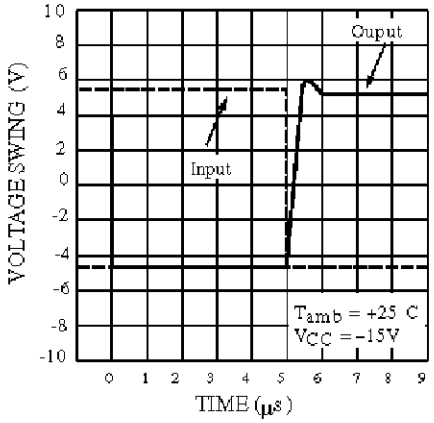

INPUT BIAS CURRENT
vs AMBIENT TEMPERATURE

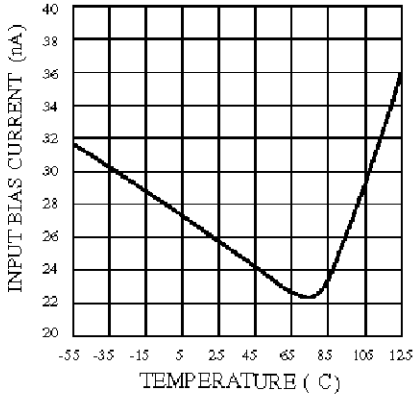

INPUT NOISE CURRENT

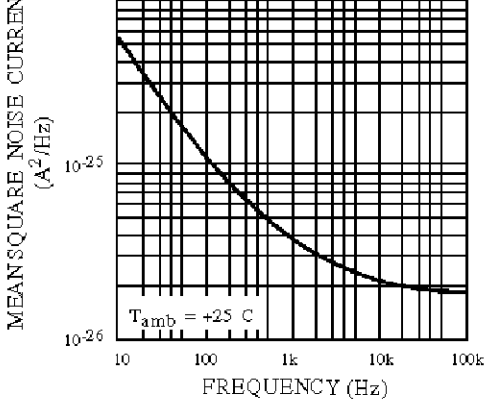

BASIC DIAGRAM

BALANCING CIRCUIT

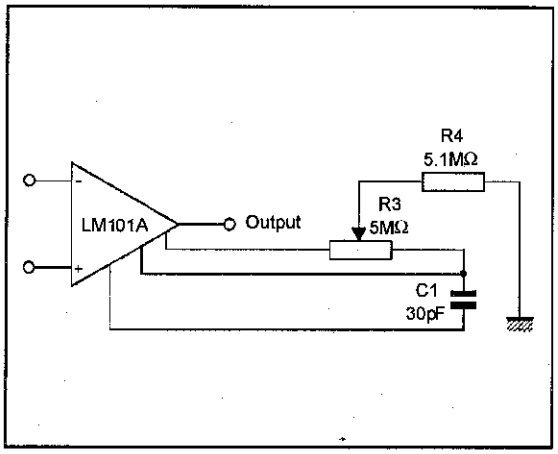

ALTERNATE BALANCING CIRCUIT

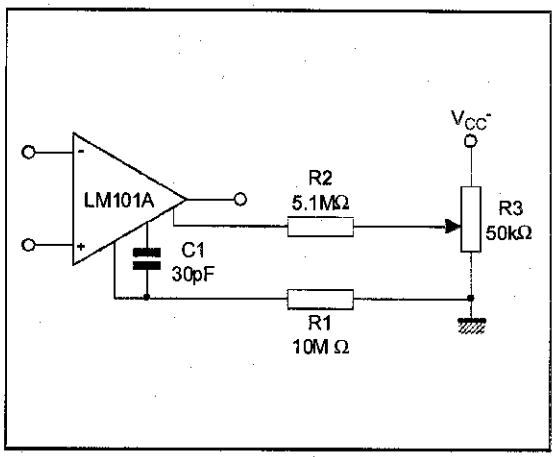

SINGLE POLE COMPENSATION

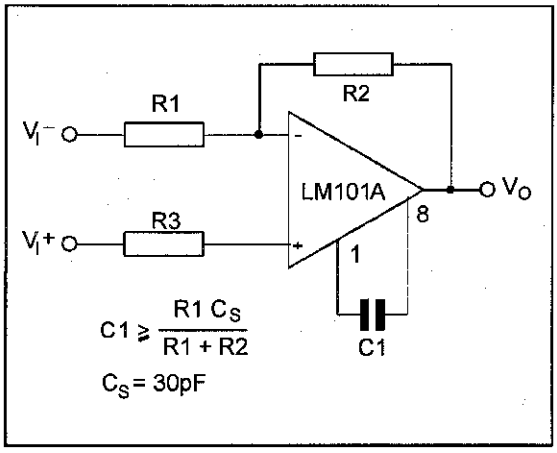

FEEDFORWARD COMPENSATION

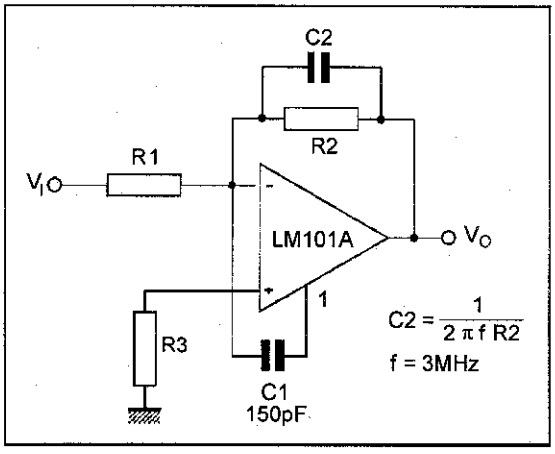

PROTECTING AGAINST GROSS FAULT CONDITIONS

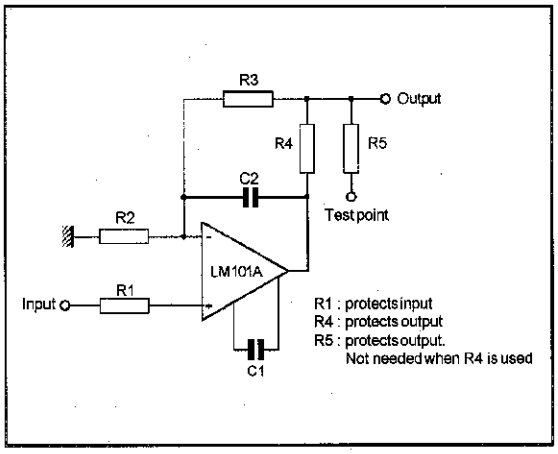

COMPENSATING FOR STRAY INPUT CAPA CITANCES OR LARGE FEEDBACK RESISTOR

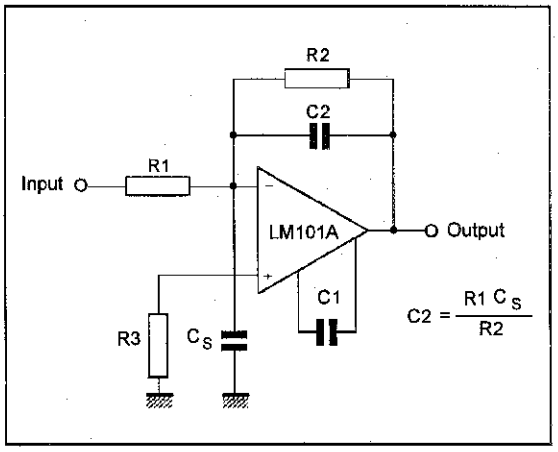

BASIC DIAGRAM (continued)

ISOLATING LARGE CAPACITIVE LOAD

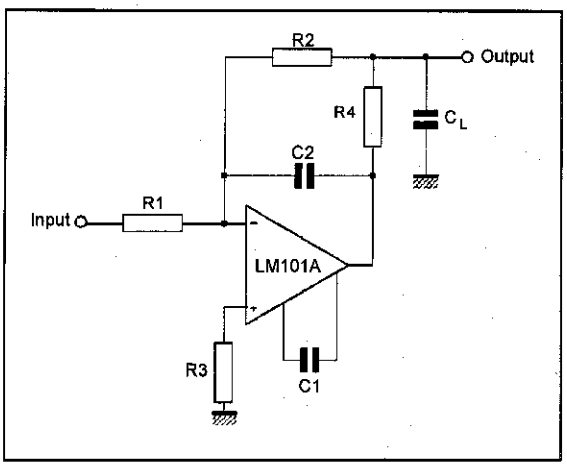

FAST AMPLIFIER WITH HIGH INPUT IMPEDANCE

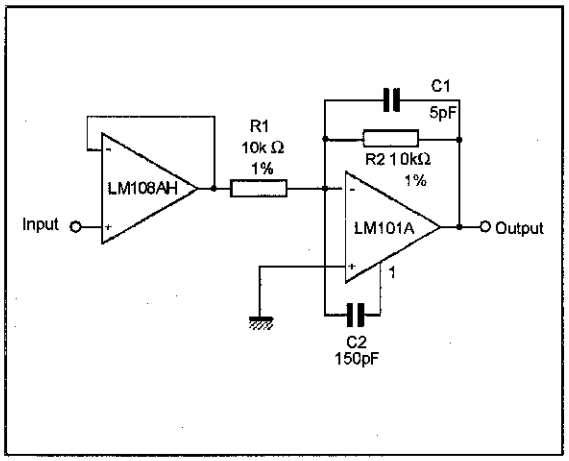

FAST AC/DC CONVERTER

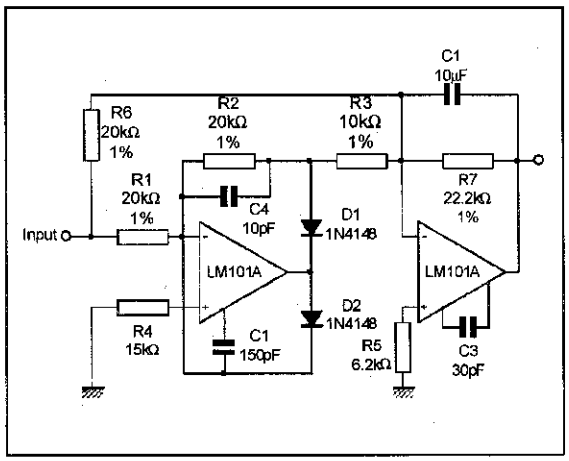

TYPICAL APPLICATIONS

SIMULATED INDUCTOR

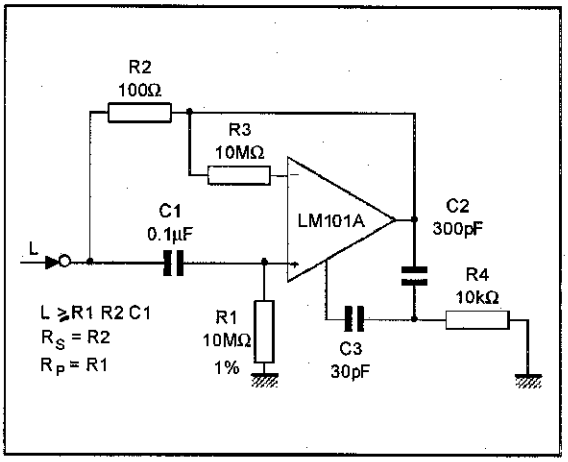

SINE WAVE OSCILLATOR

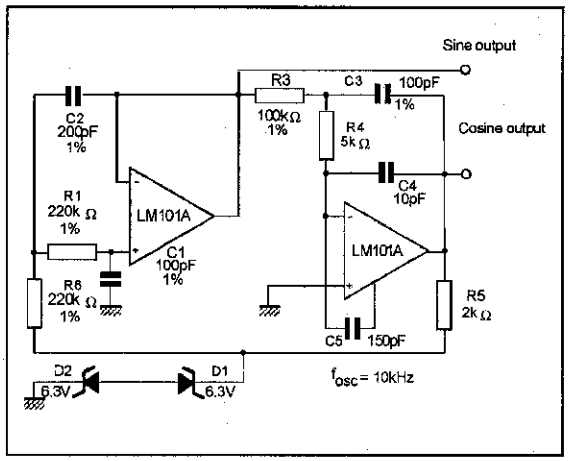

INSTRUMENTATION AMPLIFIER

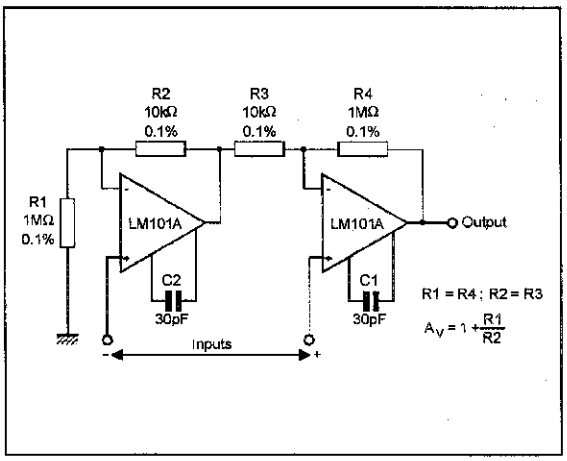

PACKAGE MECHANICAL DATA

8 PINS - PLASTIC DIP

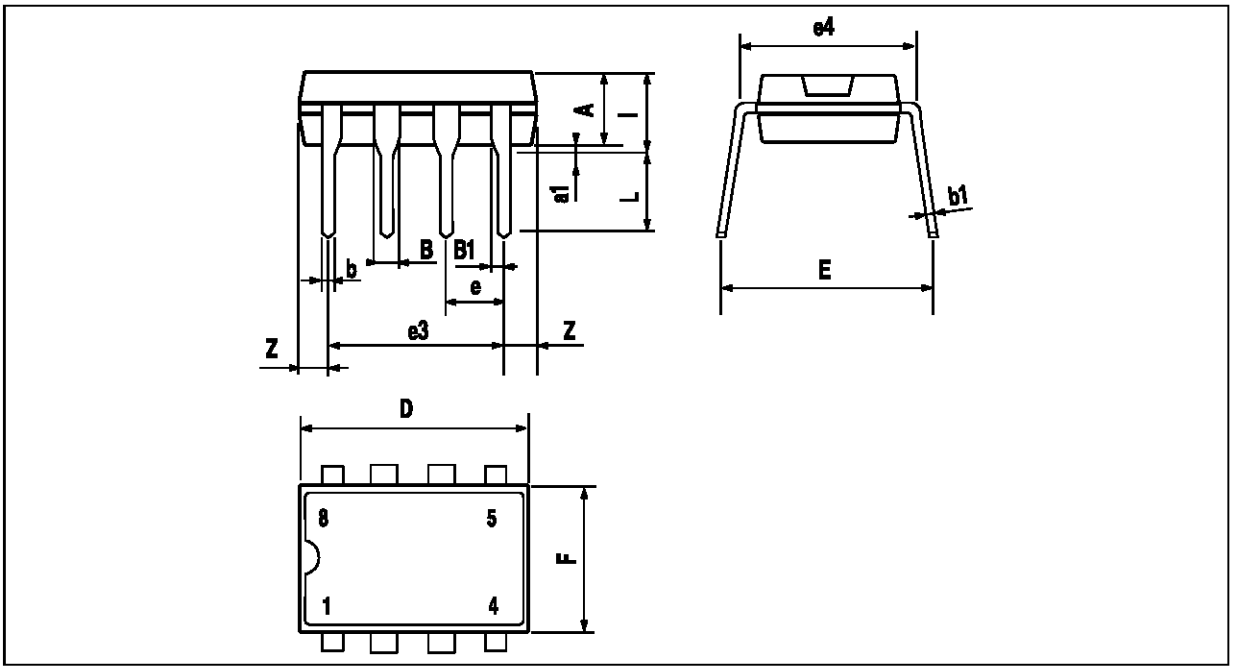

Dim.	Millimeters			Inches		
	Min.	Typ.	Max.	Min.	Typ.	Max.
A		3.32			0.131	
a1	0.51			0.020		
B	1.15		1.65	0.045		0.065
b	0.356		0.55	0.014		0.022
b1	0.204		0.304	0.008		0.012
D			10.92			0.430
E	7.95		9.75	0.313		0.384
e		2.54			0.100	
e3		7.62			0.300	
e4		7.62			0.300	
F			6.6			0260
i			5.08			0.200
L	3.18		3.81	0.125		0.150
Z			1.52			0.060

PACKAGE MECHANICAL DATA

8 PINS - PLASTIC MICROPACKAGE (SO)

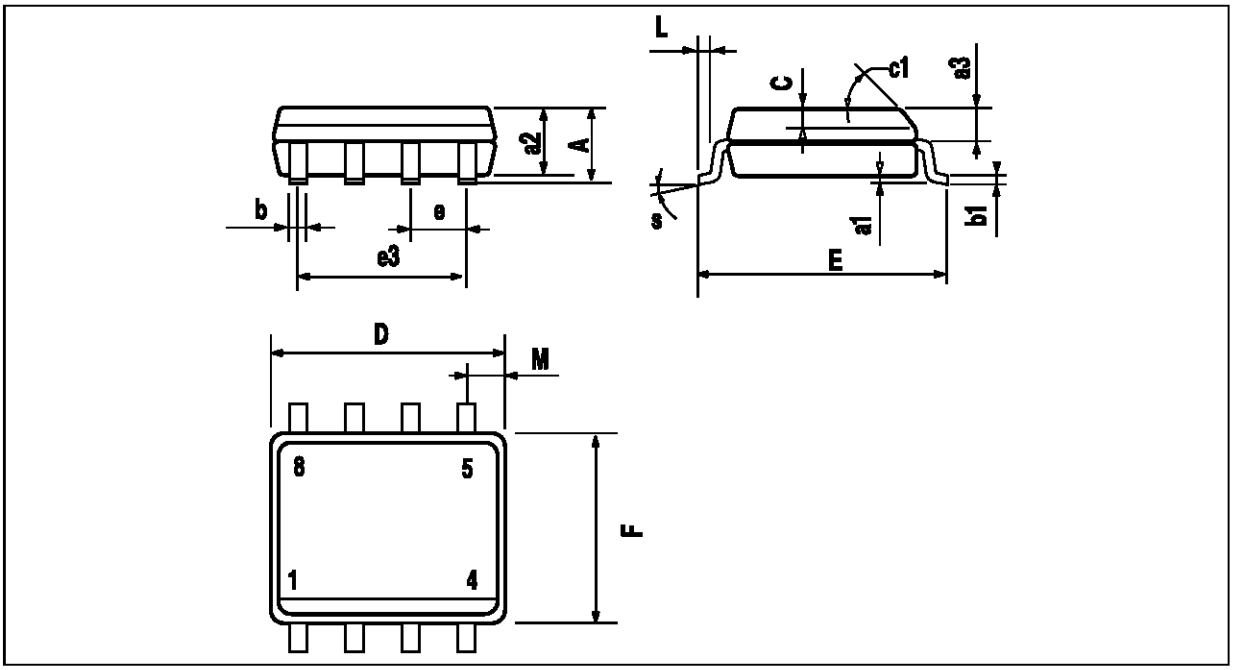

Dim.	Millimeters			Inches		
	Min.	Typ.	Max.	Min.	Typ.	Max.
A			1.75			0.069
a1	0.1		0.25	0.004		0.010
a2			1.65			0.065
a3	0.65		0.85	0.026		0.033
b	0.35		0.48	0.014		0.019
b1	0.19		0.25	0.007		0.010
C	0.25		0.5	0.010		0.020
c1	45° (typ.)					
D	4.8		5.0	0.189		0.197
E	5.8		6.2	0.228		0.244
e		1.27			0.050	
e3		3.81			0.150	
F	3.8		4.0	0.150		0.157
L	0.4		1.27	0.016		0.050
M			0.6			0.024
S	8° (max.)					