+5V-Powered, Multichannel RS-232

Drivers / Receivers

MAX232 is purposed for application in high-performance information processing systems and control devices of wide application.

Input voltage levels are compatible with standard CMOS levels.

- Output voltage levels are compatible with input levels of K-MOS, N-MOS and TTL integrated circuits.
- Supply voltage : 5V
- Low input current: 1.0 μA; 0.1 μA at T = 25 °C.
- Output current 24 mA.
- Latching current not less than 450 mA at T = 25°C
- The transmitter outputs and receiver inputs are protected to ±15kV Air ESD.

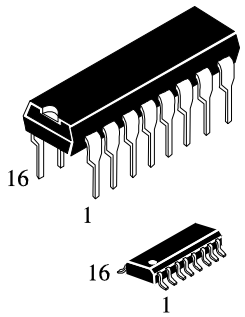

N SUFFIX
PLASTIC

D SUFFIX
SOIC

ORDERING INFORMATION

MAX232CPE	Plastic DIP
MAX232CSE	SOIC
MAX232CWE	SOIC

Truth table

Inputs	Outputs
R_{IN}, T_{IN}	R_{OVT}, T_{OVT}
H	L
L	H

Note -
H – voltage high level;
L – low voltage level

Pin symbols in package

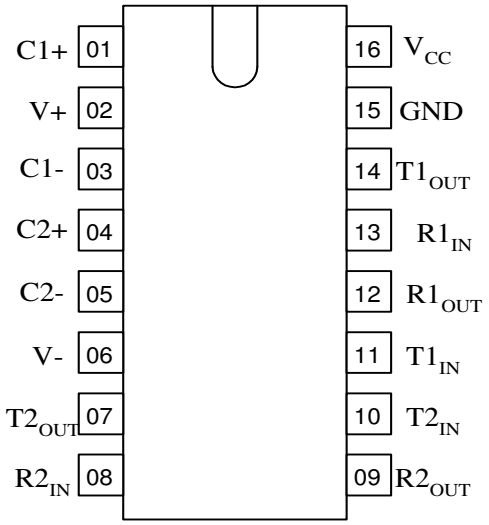

Table of pin description

Pin No.	Symbol	Pin name
01	C1+	Output of external capacitance of positive voltage multiplier unit
02	V+	Output of positive voltage of multiplier unit
03	C1-	Output of external capacitance of positive voltage multiplier unit
04	C2+	Output of external capacitance of negative voltage multiplier unit
05	C2-	Output of external capacitance of negative voltage multiplier unit
06	V-	Output of negative voltage of multiplier unit
07	$T2_{OUT}$	Output of transmitter data (levels RS – 232)
08	$R2_{IN}$	Input of receiver data (levels RS – 232)
09	$R2_{OUT}$	Output of receiver data (levels TTL/KMOS)
10	$T2_{IN}$	Input of transmitter data (levels TTL/KMOS)
11	$T1_{IN}$	Input of transmitter data (levels TTL/KMOS)
12	$R1_{OUT}$	Output of receiver data (levels TTL/KMOS)
13	$R1_{IN}$	Input of receiver data (levels RS – 232)
14	$T1_{OUT}$	Output of transmitter data (levels RS – 232)
15	GND	Common output
16	V_{CC}	Supply output of voltage source

Maximum conditions

Symbol	Parameter	Rate		Unit
		min	max	
V_{CC}	Supply voltage	-0.3	6.0	V
V+	Transmitter high output voltage	V_{CC} -0.3	14	
V-	Transmitter low output voltage	-0.3	-14	
V_{TIN}	Transmitter input voltage	-0.3	V+ +0.3	
V_{RIN}	Receiver input voltage	-30	30	
P_D	Dissipated power DIP – package SO - package	-	 842 762	mW
I_{SC}	Output current of transmitter short circuit	-	Continu-ously	mA
Ta	Ambient temperature	-60	150	^{O}C

Recommended Operating Conditions

Symbol	Parameter	Rate		Unit
		min	max	
V_{CC}	Supply voltage	4.5	5.5	V
V+	Transmitter output high voltage	5.0	-	
V-	Transmitter output low voltage	-5.0	-	
V_{TIN}	Transmitter input voltage	0	V_{CC}	
V_{RIN}	Receiver input voltage	-30	30	
I_{SC}	Transmitter short circuit output current	-	±60	mA
Ta	Ambient temperature	-40	85	^{O}C

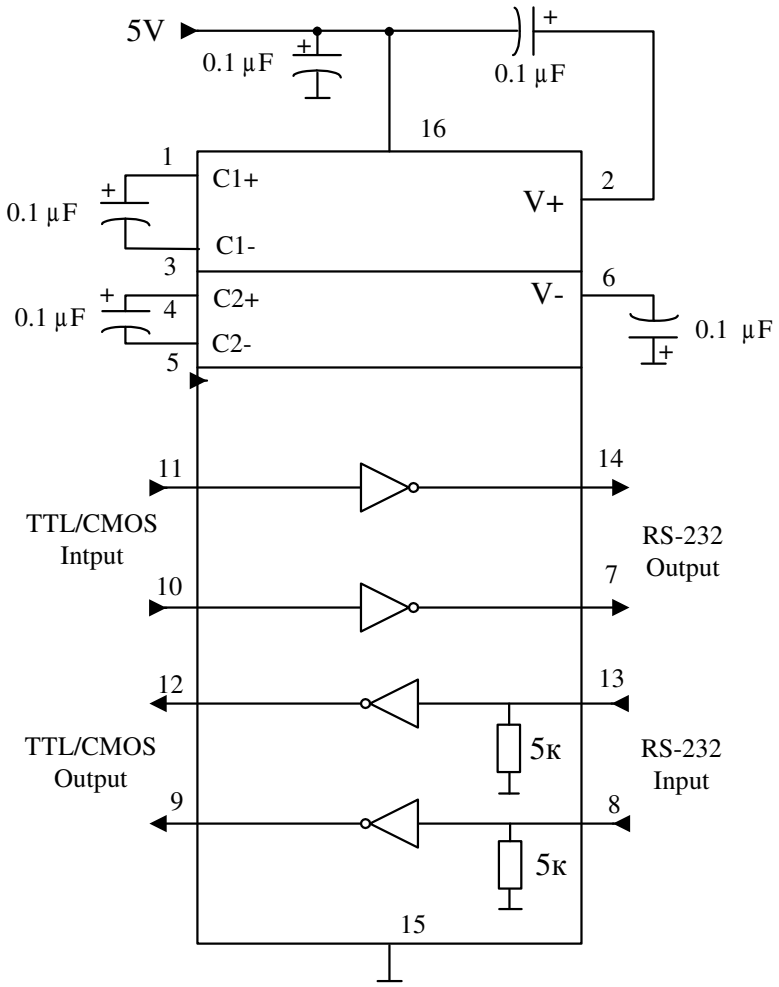

Static parameters

Symbol	Parameter	Test conditions	Rate				Unit
			25°C		-40 °C to 85 °C		
			min	max	min	max	
I_{CC}	Consumption current static	V_{CC} =5.0 V V_{IL} = 0 V	-	10.0	-	14.0*	mA
Receiver electrical parameters							
V_h	Hysteresis voltage	V_{CC} =5.0 V	0.2	0.9	0.2	1.0	V
V_{On}	On (operation) voltage	$V_O \leq 0.1$ V $I_{OL} \leq 20$ uA	-	2.4	-	2.3	
V_{off}	Off (dropout) voltage	$V_O \geq V_{CC}$ -0.1 V $I_{OH} \leq$ -20 uA	0.8	-	0.9	-	
V_{OL}	Output low voltage	I_{OL} = 3.2 mA V_{CC} = 4.5 V V_{IH} = 2.4 V	-	0.3	-	0.4	
V_{OH}	Output high voltage	I_{OH} = -1.0 mA V_{CC} = 4.5 V V_{IL} = 0.8 V	3.6	-	3.5	-	
R_I	Input resistance	V_{CC} = 5.0 V	3.0	7.0	3.0	7.0	kOhm
Transmitter electrical parameters							
V_{OL}	Output low voltage	V_{CC} = 4.5 V V_{IH} = 2.0 V R_L = 3.0 kOhm	-	-5.2	-	-5.0	V
V_{OH}	Output high voltage	V_{CC} = 4.5 V V_{IL} = 0.8 V R_L = 3.0 kOhm	5.2	-	5.0	-	
I_{IL}	Input low current	V_{CC} =5.5 V V_{IL} = 0 V	-	-1.0	-	-10.0	uA
I_{IH}	Input high current	V_{CC} =5.5 V V_{IH} = V_{CC}		1.0		10.0	
SR	Speed of output front change	V_{CC} =5.0 V C_L =50 - 1000 pF R_L = 3.0 - 7.0 kOhm	3.0	30	2.7	27	V/μs
R_O	Output resistance	V_{CC} = V+ = V- = 0 V V_O = ± 2 V	350	-	300	-	Ohm
I_{SC}	Short circuit output current	V_{CC} =5.5 V V_O = 0 V V_I = V_{CC} V_I = 0 V		-50 50		-60 60	mA
ST	Speed of information transmission	V_{CC} =4.5 V C_L = 1000 pF R_L = 3.0 kOhm t_W = 7us (for extreme -t_W = 8us)	140	-	120	-	kbps

Dynamic parameters

Symbol	Parameter	Test conditions	Rate				Unit
			25 °C		from -40 °C to 85 °C		
			min	max	min	max	
t_{PHLR} (t_{PLHR})	Signal propagation delay time when switching on (off)	V_{CC} = 4.5 V C_L = 150 pF V_{IL} = 0 V V_{IH} = 3.0 V $t_{LH} = t_{HL} \leq 10$ ns	-	9.7	-	10	us
t_{PHLT} (t_{PLHT})	Signal propagation delay time when switching on (off)	V_{CC} = 4.5 V C_L = 2500 pF V_{IL} = 0 V V_{IH} = 3.0 V R_L = 3 kOhm $t_{LH} = t_{HL} \leq 10$ ns		5.0*		6.0*	

Capacitance

Symbol	Parameter	V_{CC},	Rate	Unit
C_{IN}	Input capacitance	5.0	9.0	pF
C_{PD}	Dynamic capacitance		90	

Timing diagram when measuring IC dynamic parameters

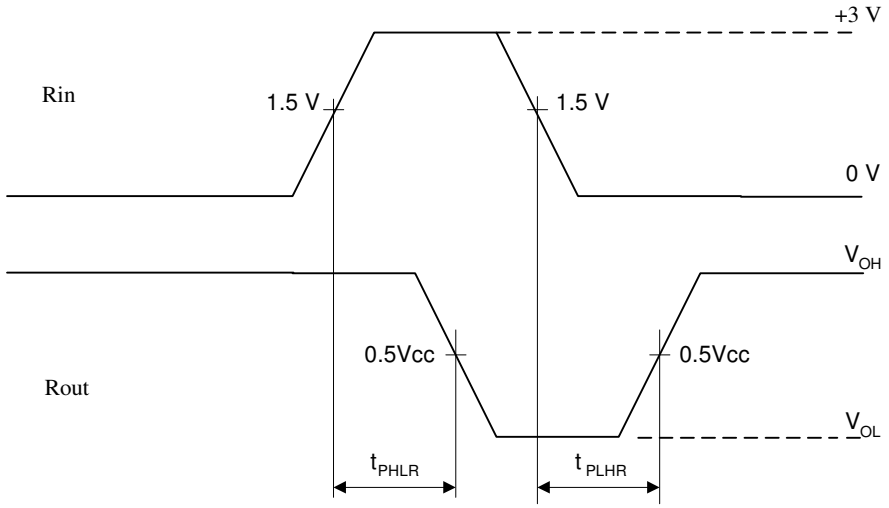

Figure 3

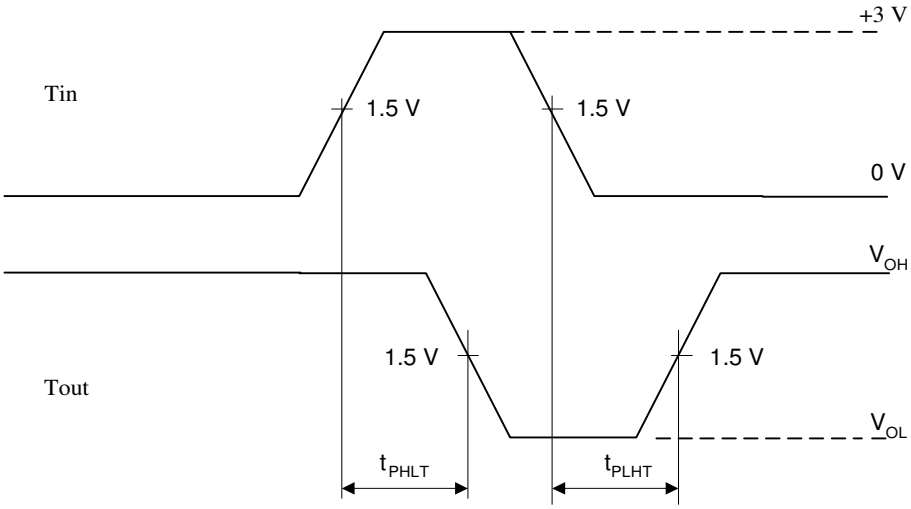

Figure 4

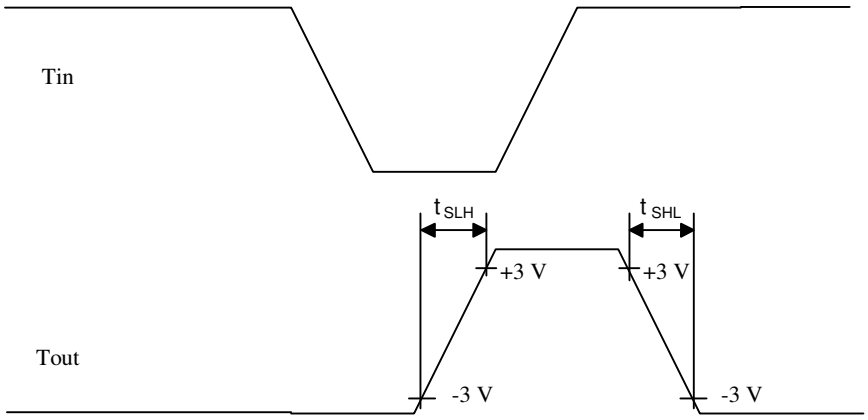

Figure 5

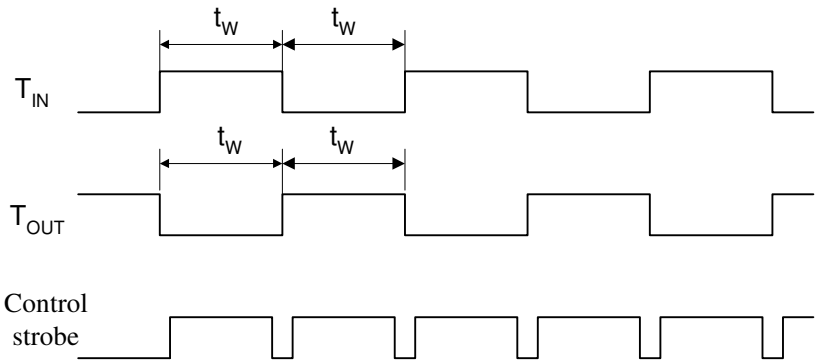

Figure 6

N SUFFIX PLASTIC DIP
(MS - 001BB)

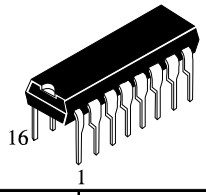

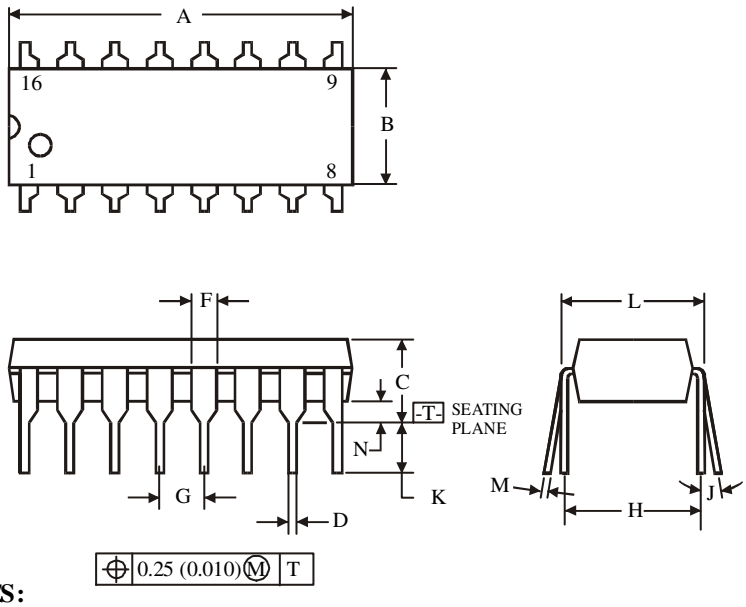

	Dimension, mm	
Symbol	**MIN**	**MAX**
A	18.67	19.69
B	6.1	7.11
C		5.33
D	0.36	0.56
F	1.14	1.78
G	2.54	
H	7.62	
J	0°	10°
K	2.92	3.81
L	7.62	8.26
M	0.2	0.36
N	0.38	

NOTES:

1. Dimensions "A", "B" do not include mold flash or protrusions.
   Maximum mold flash or protrusions 0.25 mm (0.010) per side.

D SUFFIX SOIC
(MS - 012AC)

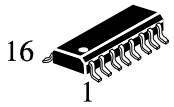

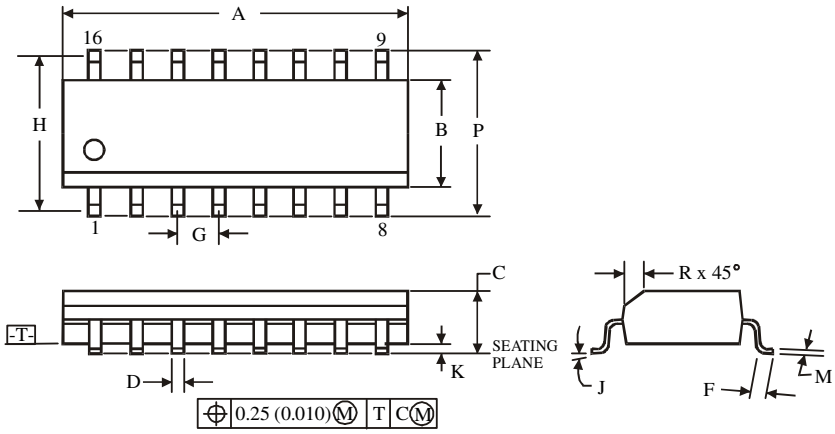

	Dimension, mm	
Symbol	**MIN**	**MAX**
A	9.8	10
B	3.8	4
C	1.35	1.75
D	0.33	0.51
F	0.4	1.27
G	1.27	
H	5.72	
J	0°	8°
K	0.1	0.25
M	0.19	0.25
P	5.8	6.2
R	0.25	0.5

NOTES:

1. Dimensions A and B do not include mold flash or protrusion.
2. Maximum mold flash or protrusion 0.15 mm (0.006) per side for A; for B - 0.25 mm (0.010) per side.