STW43NM60ND

N-channel 600 V, 0.075 Ω, 35 A TO-247
FDmesh™ Power MOSFET (with fast diode)

Features

Type	V_{DSS} @ T_{JMAX}	$R_{DS(on)}$ max	I_D
STW43NM60ND	650 V	< 0.088 Ω	35 A

- The worldwide best $R_{DS(on)}$*area amongst the fast recovery diode devices
- 100% avalanche tested
- Low input capacitance and gate charge
- Low gate input resistance
- Extremely high dv/dt and avalanche capabilities.

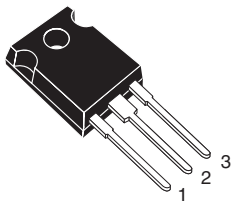

TO-247

Application

- Switching applications

Description

The FDmesh™ II series belongs to the second generation of MDmesh™ technology. This revolutionary Power MOSFET associates a new vertical structure to the company's strip layout and associates all advantages of reduced on-resistance and fast switching with an intrinsic fast-recovery body diode.It is therefore strongly recommended for bridge topologies, in particular ZVS phase-shift converters.

Figure 1. Internal schematic diagram

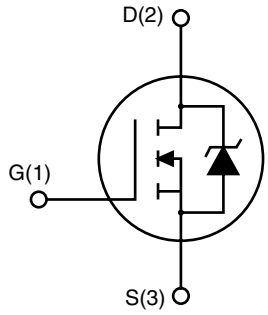

Table 1. Device summary

Order code	Marking	Package	Packaging
STW43NM60ND	43NM60ND	TO-247	Tube

Contents

1 Electrical ratings 3

2 Electrical characteristics 4

2.1 Electrical characteristics (curves) 6

3 Test circuits 8

4 Package mechanical data 9

5 Revision history 11

1 Electrical ratings

Table 2. Absolute maximum ratings

Symbol	Parameter	Value	Unit
V_{DS}	Drain-source voltage (V_{GS} = 0)	600	V
V_{GS}	Gate-source voltage	± 25	V
I_D	Drain current (continuous) at T_C = 25 °C	35	A
I_D	Drain current (continuous) at T_C = 100 °C	22	A
I_{DM} (1)	Drain current (pulsed)	140	A
P_{TOT}	Total dissipation at T_C = 25 °C	255	W
dv/dt (2)	Peak diode recovery voltage slope	40	V/ns
T_{stg}	Storage temperature	–55 to 150	°C
T_j	Max. operating junction temperature	150	°C

1. Pulse width limited by safe operating area
2. $I_{SD} \leq$ 35 A, di/dt $\leq$ 600 A/µs, V_{DD} = 80% $V_{(BR)DSS}$

Table 3. Thermal data

Symbol	Parameter	Value	Unit
Rthj-case	Thermal resistance junction-case max	0.49	°C/W
Rthj-amb	Thermal resistance junction-ambient max	50	°C/W
T_l	Maximum lead temperature for soldering purpose	300	°C

Table 4. Avalanche characteristics

Symbol	Parameter	Value	Unit
I_{AS}	Avalanche current, repetitive or not-repetitive (pulse width limited by Tj Max)	14	A
E_{AS}	Single pulse avalanche energy (starting T_J=25 °C, I_D=I_{AS}, V_{DD}=50 V)	1000	mJ

2 Electrical characteristics

(T_{CASE} = 25 °C unless otherwise specified)

Table 5. On/off states

Symbol	Parameter	Test conditions	Min.	Typ.	Max.	Unit
$V_{(BR)DSS}$	Drain-source breakdown voltage	I_D = 1 mA, V_{GS} = 0	600			V
I_{DSS}	Zero gate voltage drain current (V_{GS} = 0)	V_{DS} = Max rating V_{DS} = Max rating, @125 °C			1 100	µA µA
I_{GSS}	Gate-body leakage current (V_{DS} = 0)	V_{GS} = ± 20 V			100	nA
$V_{GS(th)}$	Gate threshold voltage	V_{DS} = V_{GS}, I_D = 250 µA	3	4	5	V
$R_{DS(on)}$	Static drain-source on resistance	V_{GS} = 10 V, I_D = 17.5 A		0.075	0.088	Ω

Table 6. Dynamic

Symbol	Parameter	Test conditions	Min.	Typ.	Max.	Unit
g_{fs} (1)	Forward transconductance	V_{DS}=15 V, I_D = 17.5 A	-	17	-	S
C_{iss} C_{oss} C_{rss}	Input capacitance Output capacitance Reverse transfer capacitance	V_{DS} = 50 V, f = 1 MHz, V_{GS} = 0	-	4300 250 25	-	pF pF pF
$C_{oss\ eq.}$ (2)	Equivalent output capacitance	V_{GS} = 0, V_{DS} = 0 to 480 V	-	530	-	pF
Q_g Q_{gs} Q_{gd}	Total gate charge Gate-source charge Gate-drain charge	V_{DD} = 480 V, I_D = 35 A, V_{GS} = 10 V, *(see Figure 15)*	-	145 18 80	-	nC nC nC
R_g	Gate input resistance	f=1 MHz Gate DC Bias=0 Test signal level = 20 mV open drain	-	1.7	-	Ω

1. Pulsed: Pulse duration = 300 µs, duty cycle 1.5%
2. $C_{oss\ eq.}$ is defined as a constant equivalent capacitance giving the same charging time as C_{oss} when V_{DS} increases from 0 to 80% V_{DS}

Table 7. Switching times

Symbol	Parameter	Test conditions	Min.	Typ.	Max.	Unit
$t_{d(on)}$ t_r $t_{d(off)}$ t_f	Turn-on delay time Rise time Turn-off delay time Fall time	V_{DD} = 300 V, I_D = 17.5 A R_G = 4.7 Ω V_{GS} = 10 V *(see Figure 14)*	-	30 40 120 50	-	ns ns ns ns

Table 8. Source drain diode

Symbol	Parameter	Test conditions	Min	Typ.	Max	Unit
I_{SD} I_{SDM} (1)	Source-drain current Source-drain current (pulsed)		-		35 140	A A
V_{SD} (2)	Forward on voltage	I_{SD} = 35 A, V_{GS} = 0	-		1.3	V
t_{rr} Q_{rr} I_{RRM}	Reverse recovery time Reverse recovery charge Reverse recovery current	I_{SD} = 35 A, di/dt = 100 A/µs V_{DD} = 100 V *(see Figure 16)*	-	190 1.6 17		ns µC A
t_{rr} Q_{rr} I_{RRM}	Reverse recovery time Reverse recovery charge Reverse recovery current	I_{SD} = 35 A, di/dt = 100 A/µs V_{DD} = 100 V, T_j = 150 °C *(see Figure 16)*	-	280 3.0 22		ns µC A

1. Pulse width limited by safe operating area
2. Pulsed: Pulse duration = 300 µs, duty cycle 1.5%

2.1 Electrical characteristics (curves)

Figure 2. Safe operating area

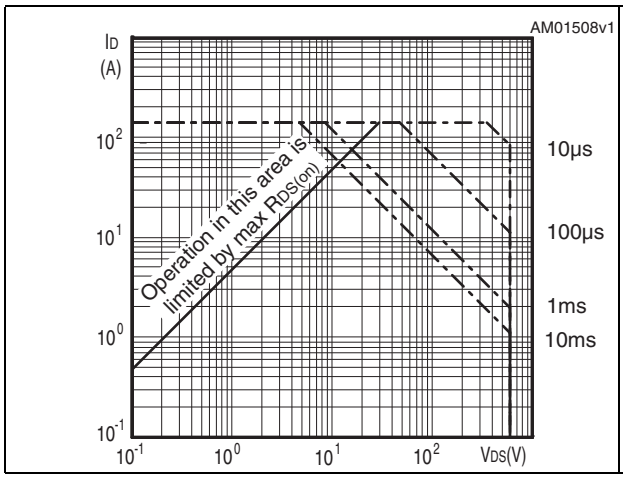

Figure 3. Thermal impedance

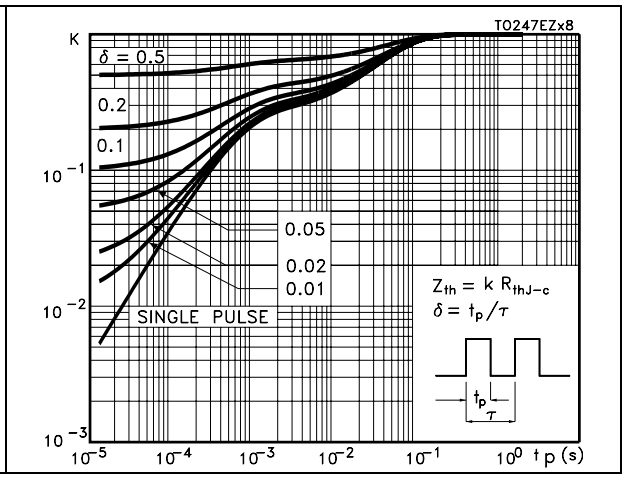

Figure 4. Output characteristics

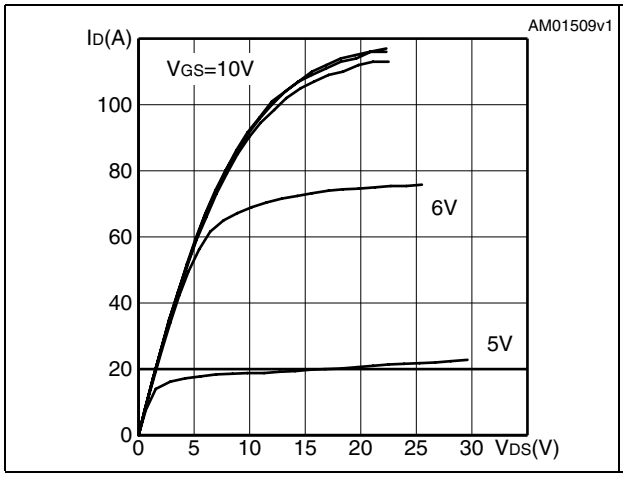

Figure 5. Transfer characteristics

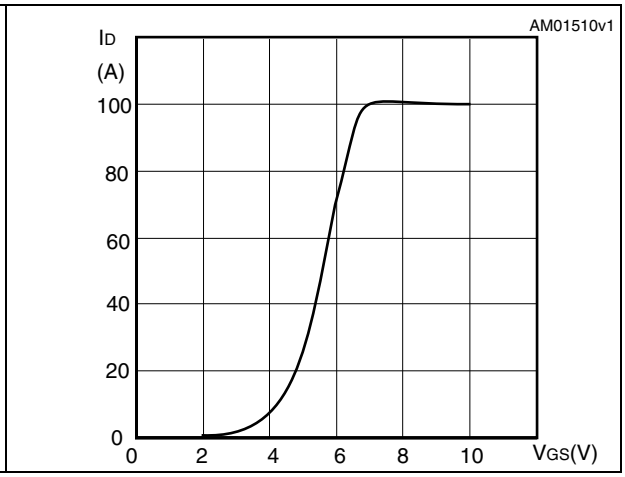

Figure 6. Transconductance

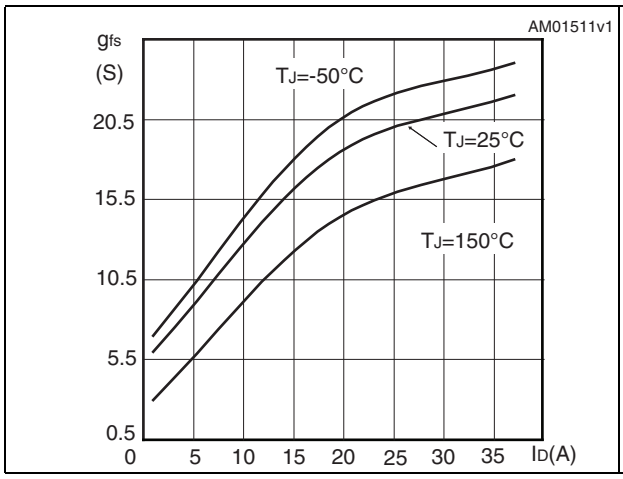

Figure 7. Static drain-source on resistance

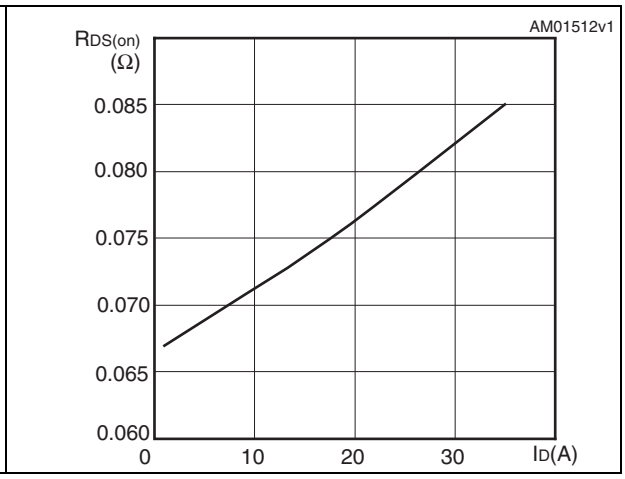

Figure 8. Gate charge vs gate-source voltage

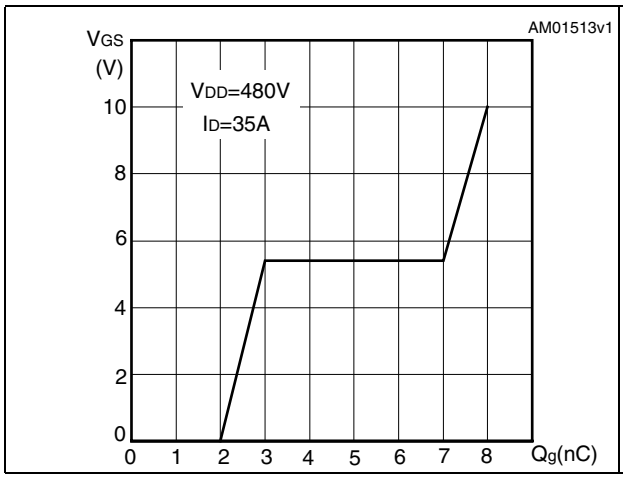

Figure 9. Capacitance variations

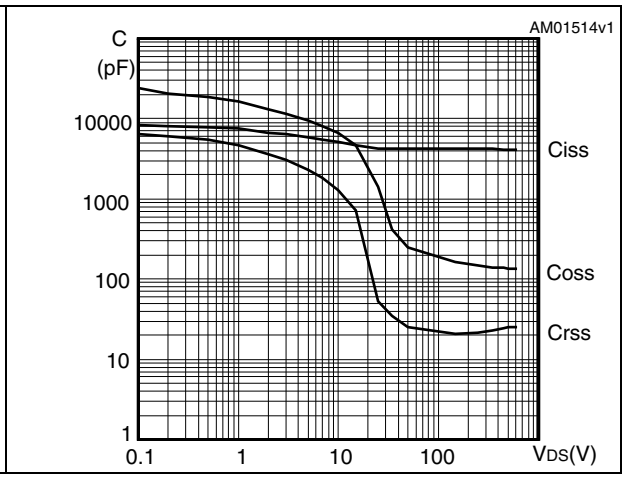

Figure 10. Normalized gate threshold voltage vs temperature

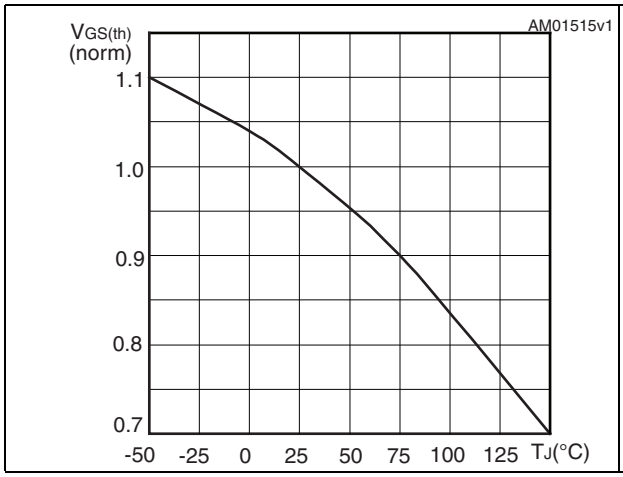

Figure 11. Normalized on resistance vs temperature

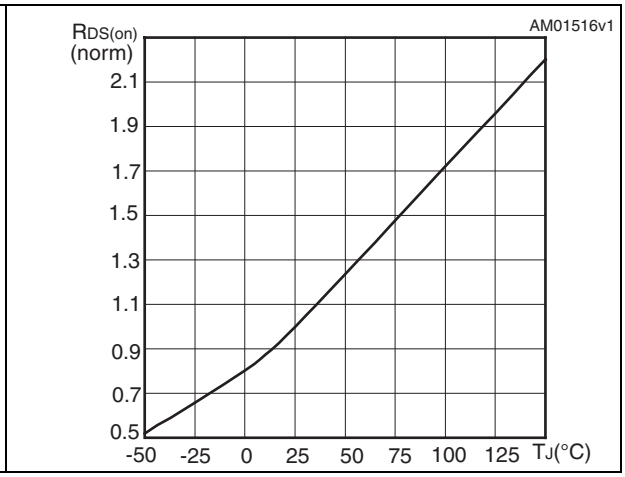

Figure 12. Source-drain diode forward characteristics

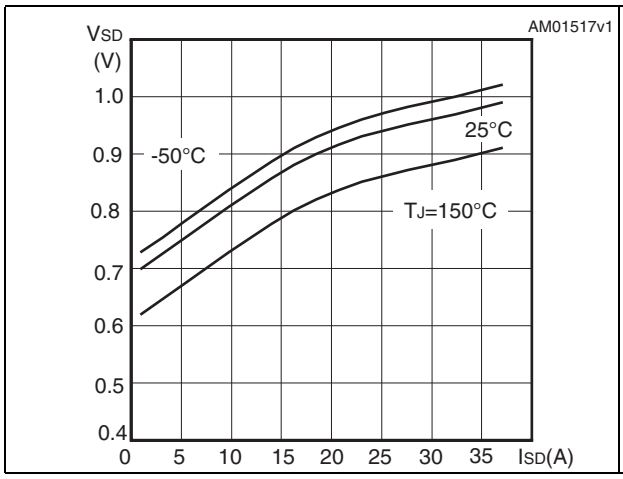

Figure 13. Normalized B_{VDSS} vs temperature

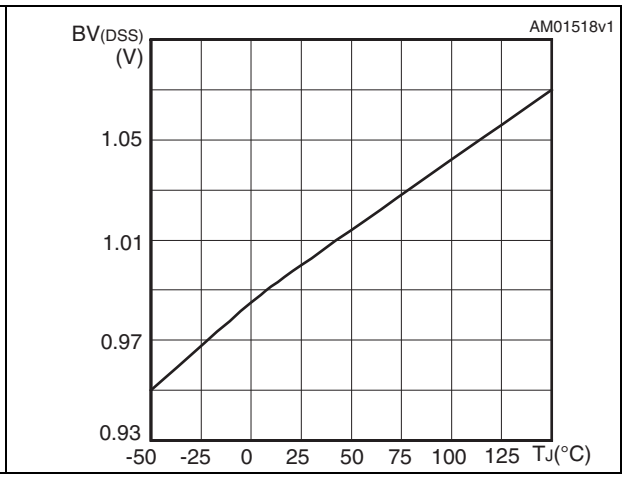

3 Test circuits

Figure 14. Switching times test circuit for resistive load

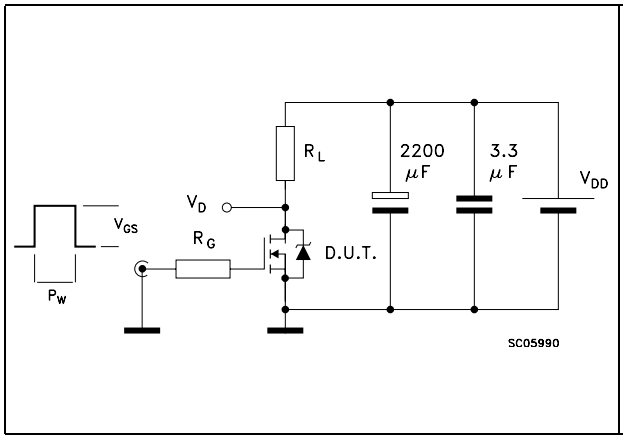

Figure 15. Gate charge test circuit

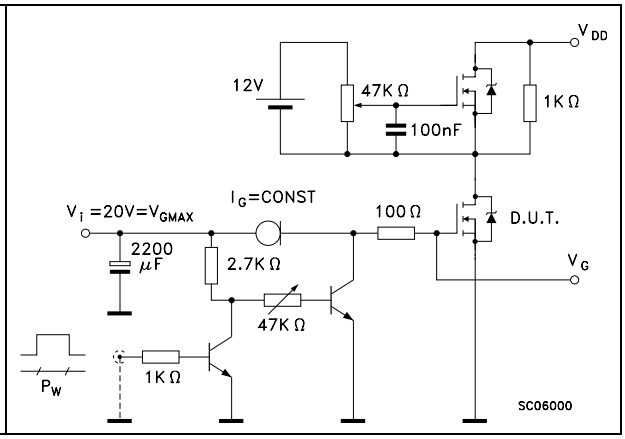

Figure 16. Test circuit for inductive load switching and diode recovery times

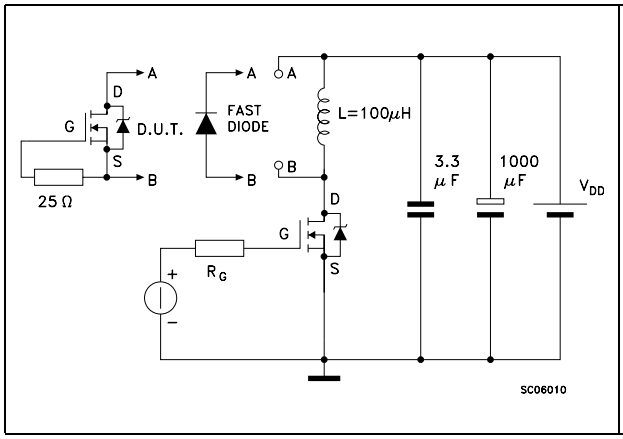

Figure 17. Unclamped inductive load test circuit

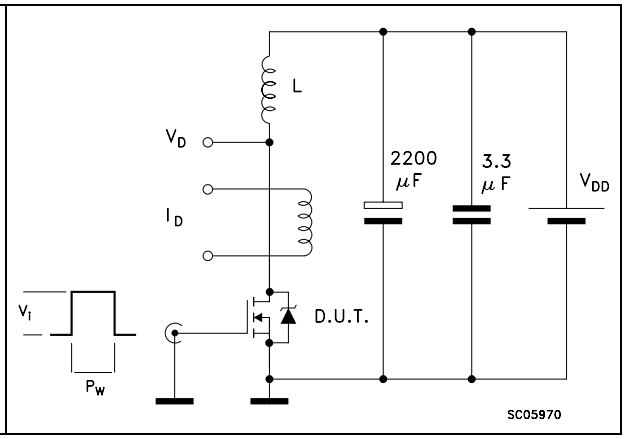

Figure 18. Unclamped inductive waveform

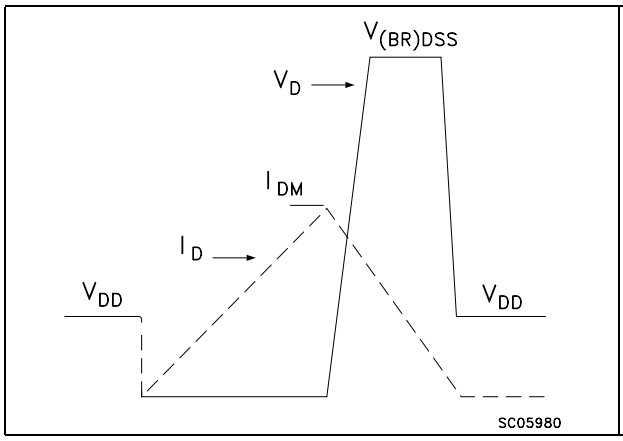

Figure 19. Switching time waveform

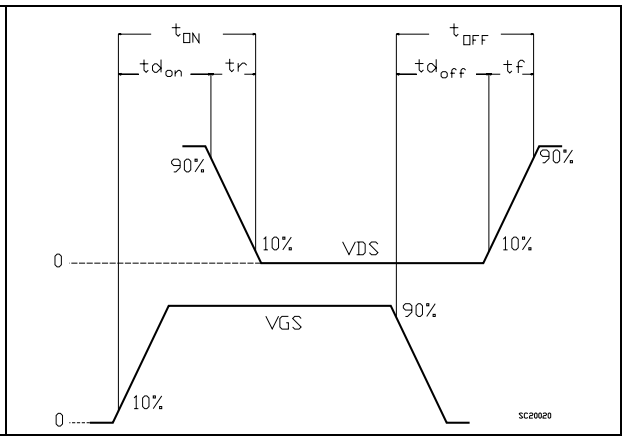

TO-247 mechanical data
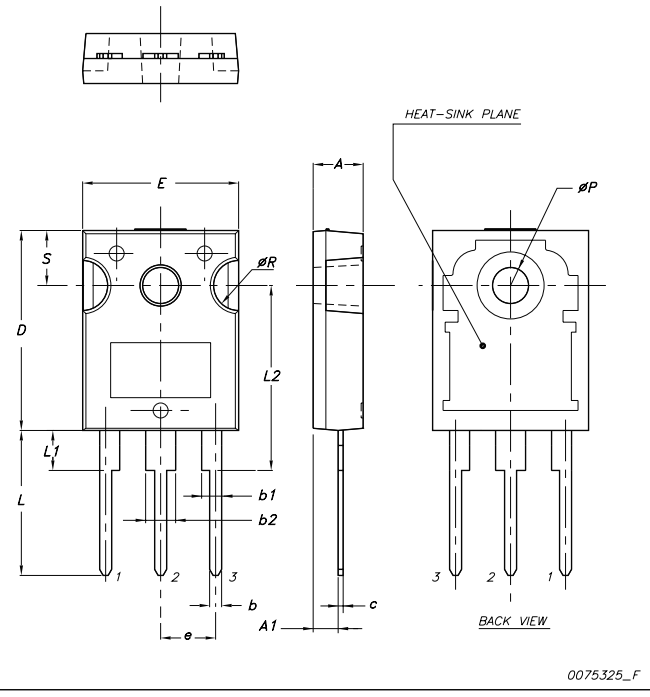
Dim.	mm.		
	Min.	Typ.	Max.
A	4.85		5.15
A1	2.20		2.60
b	1.0		1.40
b1	2.0		2.40
b2	3.0		3.40
c	0.40		0.80
D	19.85		20.15
E	15.45		15.75
e		5.45	
L	14.20		14.80
L1	3.70		4.30
L2		18.50	
øP	3.55		3.65
øR	4.50		5.50
S		5.50