STP26NM60N

N-channel 600 V, 0.135 Ω typ., 20 A MDmesh™ II Power MOSFET in D²PAK, I²PAK, TO-220, TO-220FP and TO-247 packages

Datasheet — production data

Features

Type	V_{DSS}	$R_{DS(on)}$ max	I_D
STB26NM60N	600 V	< 0.165 Ω	20 A
STF26NM60N	600 V	< 0.165 Ω	20 A
STI26NM60N	600 V	< 0.165 Ω	20 A
STP26NM60N	600 V	< 0.165 Ω	20 A
STW26NM60N	600 V	< 0.165 Ω	20 A

- 100% avalanche tested
- Low input capacitance and gate charge
- Low gate input resistance

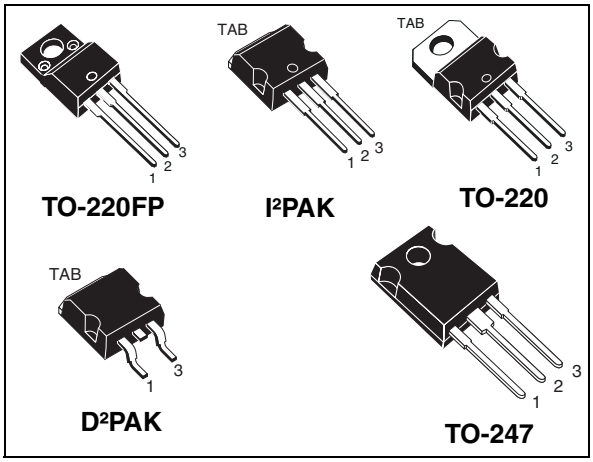

Application

- Switching applications

Description

These devices are N-channel Power MOSFETs developed using the second generation of MDmesh™ technology. This revolutionary Power MOSFET applies a new vertical structure to the company's strip layout to yield a device with one of the world's lowest on-resistance and gate charge, making it suitable for the most demanding high-efficiency converters.

Figure 1. Internal schematic diagram

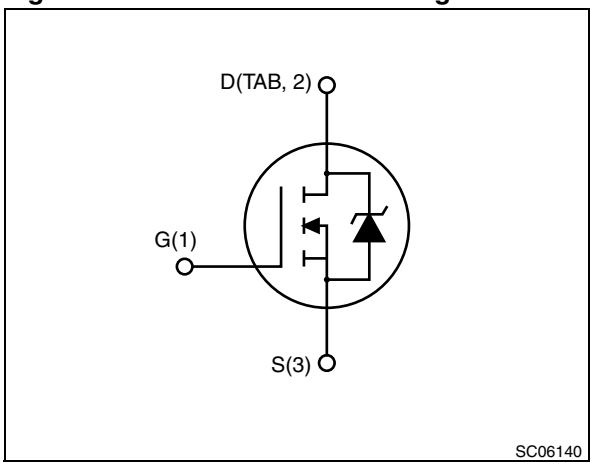

Table 1. Device summary

Order codes	Marking	Package	Packaging
STB26NM60N	26NM60N	D²PAK	Tape and reel
STF26NM60N		TO-220FP	Tube
STI26NM60N		I²PAK	
STP26NM60N		TO-220	
STW26NM60N		TO-247	

Contents

1 Electrical ratings 3

2 Electrical characteristics 5

2.1 Electrical characteristics (curves) 7

3 Test circuits 10

4 Package mechanical data 11

5 Packaging mechanical data 20

6 Revision history 22

1 Electrical ratings

Table 2. Absolute maximum ratings

Symbol	Parameter	Value		Unit
		D²PAK, I²PAK, TO-220, TO-247	TO-220FP	
V_{DS}	Drain-source voltage	600		V
V_{GS}	Gate-source voltage	± 25		V
I_D	Drain current (continuous) at T_C = 25 °C	20	20(1)	A
I_D	Drain current (continuous) at T_C = 100 °C	12.6	12.6 (1)	A
I_{DM} (2)	Drain current (pulsed)	80	80(1)	A
P_{TOT}	Total dissipation at T_C = 25 °C	140	35	W
	Derating factor	1.12	0.28	W/°C
dv/dt (3)	Peak diode recovery voltage slope	15		V/ns
V_{ISO}	Insulation withstand voltage (RMS) from all three leads to external heat sink (t=1 s;T_C=25 °C)		2500	V
T_{stg}	Storage temperature	–55 to 150		°C
T_j	Max. operating junction temperature	150		°C

1. Limited by maximum junction temperature.
2. Pulse width limited by safe operating area.
3. $I_{SD} \leq 20$ A, di/dt ≤ 400 A/µs, $V_{DSpeak} \leq V_{(BR)DSS}$, V_{DD} = 80% $V_{(BR)DSS}$

Table 3. Thermal data

Symbol	Parameter	Value					Unit
		TO-247	TO-220	I²PAK	D²PAK	TO-220FP	
$R_{thj\text{-}case}$	Thermal resistance junction-case max	0.89				3.6	°C/W
$R_{thj\text{-}amb}$	Thermal resistance junction-ambient max	50	62.5			62.5	°C/W
$R_{thj\text{-}pcb}$(1)	Thermal resistance junction-pcb max				30		°C/W

1. When mounted on FR-4 board of 1inch², 2oz Cu, t < 10 sec.

Table 4. Avalanche characteristics

Symbol	Parameter	Value	Unit
I_{AS}	Avalanche current, repetitive or not-repetitive (pulse width limited by Tj max)	6	A
E_{AS}	Single pulse avalanche energy (starting T_J=25 °C, I_D=I_{AS}, V_{DD}=50 V)	610	mJ

2 Electrical characteristics

(T_{CASE} = 25 °C unless otherwise specified)

Table 5. On/off states

Symbol	Parameter	Test conditions	Min.	Typ.	Max.	Unit
$V_{(BR)DSS}$	Drain-source breakdown voltage	I_D = 1 mA, V_{GS} = 0	600			V
I_{DSS}	Zero gate voltage drain current (V_{GS} = 0) V_{DS} = 600 V V_{DS} = 600 V, T_C = 125 °C				1 100	µA µA
I_{GSS}	Gate-body leakage current (V_{DS} = 0)	V_{GS} = ± 25 V			±0.1	µA
$V_{GS(th)}$	Gate threshold voltage	V_{DS} = V_{GS}, I_D = 250 µA	2	3	4	V
$R_{DS(on)}$	Static drain-source on-resistance	V_{GS} = 10 V, I_D = 10 A		0.135	0.165	Ω

Table 6. Dynamic

Symbol	Parameter	Test conditions	Min.	Typ.	Max.	Unit
C_{iss} C_{oss} C_{rss}	Input capacitance Output capacitance Reverse transfer capacitance	V_{DS} = 50 V, f = 1 MHz, V_{GS} = 0	-	1800 115 1.1	-	pF pF pF
$C_{oss\ eq.}$ (1)	Equivalent output capacitance	V_{GS} = 0, V_{DS} = 0 to 480 V	-	310	-	pF
Q_g Q_{gs} Q_{gd}	Total gate charge Gate-source charge Gate-drain charge	V_{DD} = 480 V, I_D = 20 A, V_{GS} = 10 V, *(see Figure 19)*	-	60 8.5 30	-	nC nC nC
R_g	Gate input resistance	f=1 MHz Gate DC Bias=0 Test signal level = 20 mV open drain	-	2.8	-	Ω

1. $C_{oss\ eq.}$ is defined as a constant equivalent capacitance giving the same charging time as C_{oss} when V_{DS} increases from 0 to 80% V_{DS}

Table 7. Switching times

Symbol	Parameter	Test conditions	Min.	Typ.	Max.	Unit
$t_{d(on)}$ t_r $t_{d(off)}$ t_f	Turn-on delay time Rise time Turn-off delay time Fall time	V_{DD} = 300 V, I_D = 10 A R_G = 4.7 Ω V_{GS} = 10 V *(see Figure 18)*	-	13 25 85 50	-	ns ns ns ns

Table 8. Source drain diode

Symbol	Parameter	Test conditions	Min.	Typ.	Max	Unit
I_{SD} I_{SDM} (1)	Source-drain current Source-drain current (pulsed)		-		20 80	A A
V_{SD} (2)	Forward on voltage	I_{SD} = 20 A, V_{GS} = 0	-		1.5	V
t_{rr} Q_{rr} I_{RRM}	Reverse recovery time Reverse recovery charge Reverse recovery current	I_{SD} = 20 A, di/dt = 100 A/µs V_{DD} = 60 V *(see Figure 20)*	-	370 5.8 31.6		ns µC A
t_{rr} Q_{rr} I_{RRM}	Reverse recovery time Reverse recovery charge Reverse recovery current	I_{SD} = 20 A, di/dt = 100 A/µs V_{DD} = 60 V, T_j = 150 °C *(see Figure 20)*	-	450 7.5 32.5		ns µC A

1. Pulse width limited by safe operating area
2. Pulsed: pulse duration = 300 µs, duty cycle 1.5%

2.1 Electrical characteristics (curves)

Figure 2. Safe operating area for TO-220, D²PAK and I²PAK

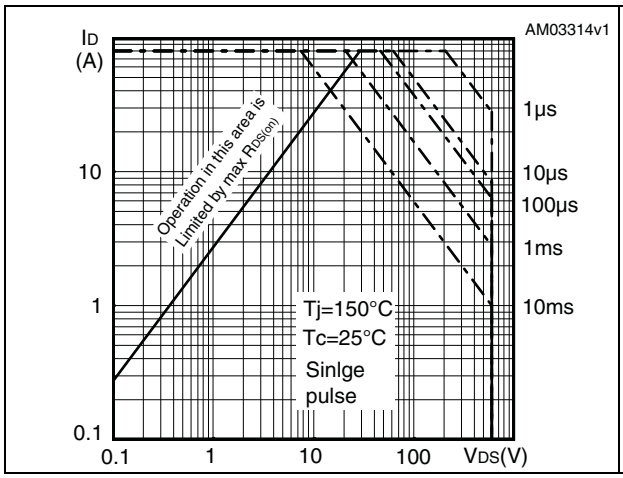

Figure 3. Thermal impedance for TO-220, D²PAK and I²PAK

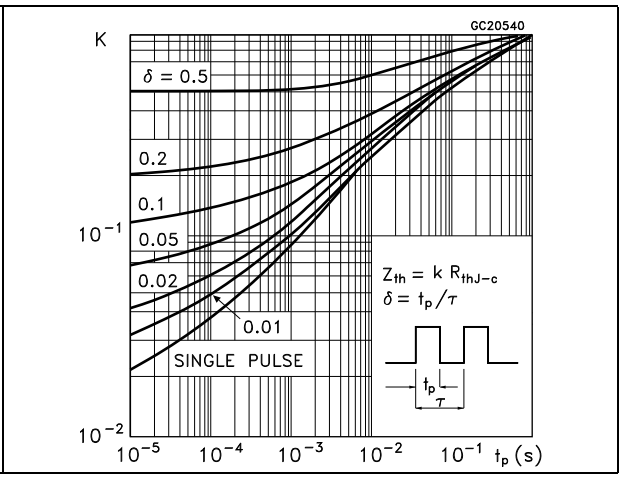

Figure 4. Safe operating area for TO-220FP

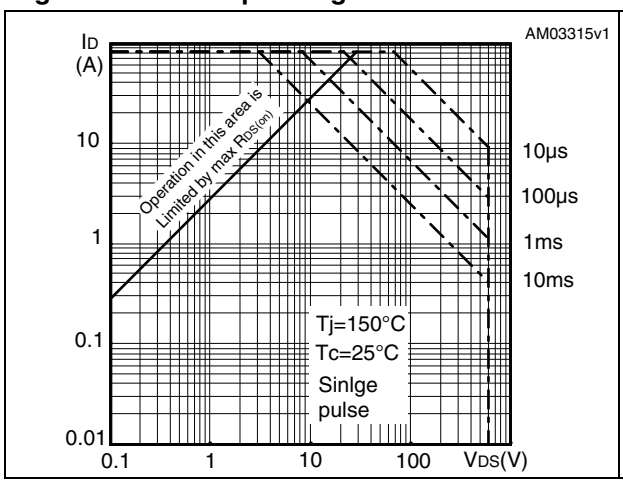

Figure 5. Thermal impedance for TO-220FP

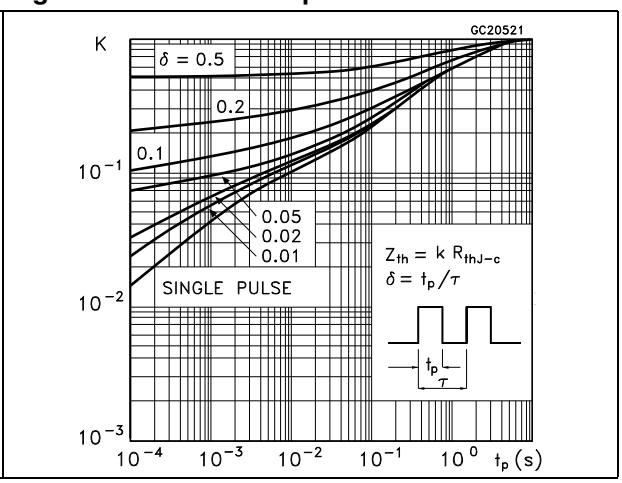

Figure 6. Safe operating area for TO-247

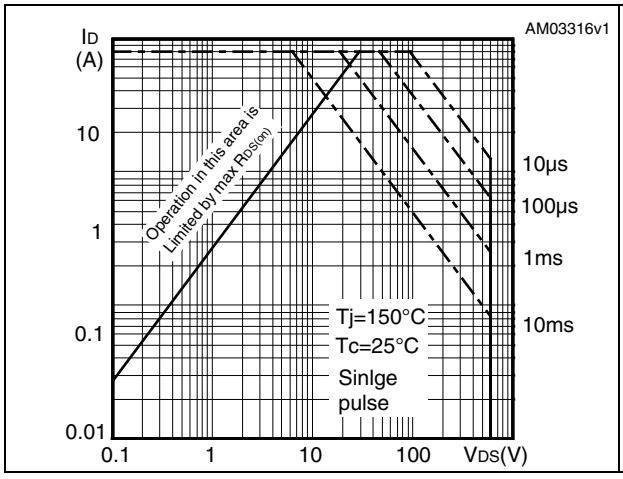

Figure 7. Thermal impedance for TO-247

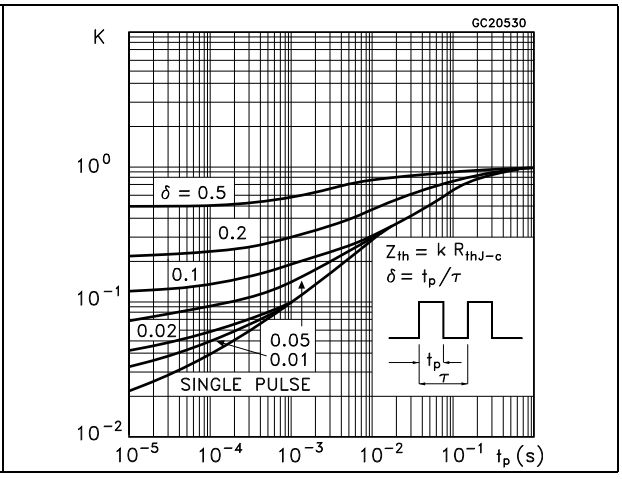

Figure 8. Output characteristics

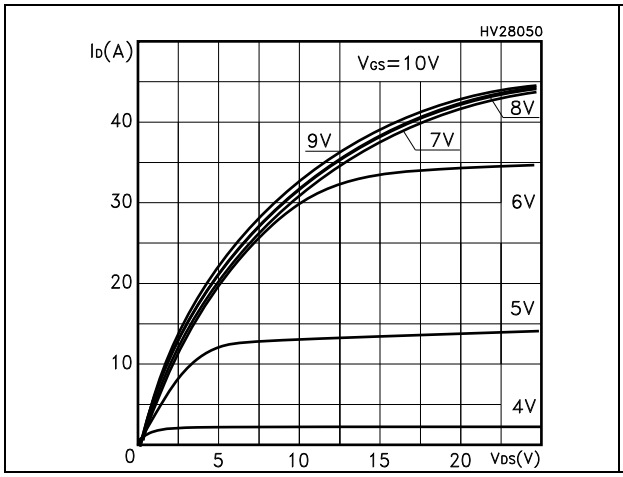

Figure 9. Transfer characteristics

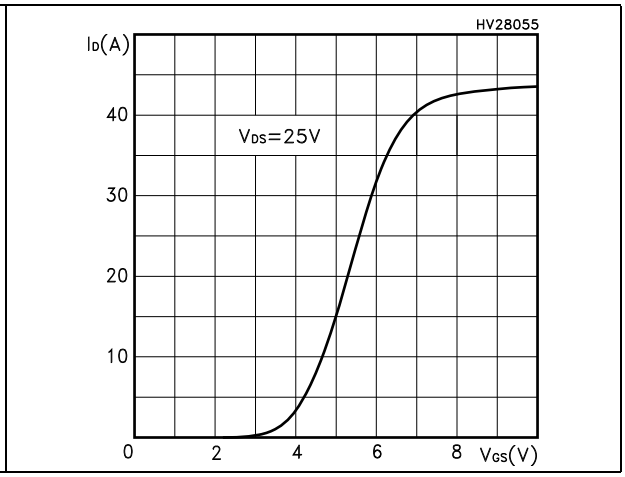

Figure 10. Transconductance

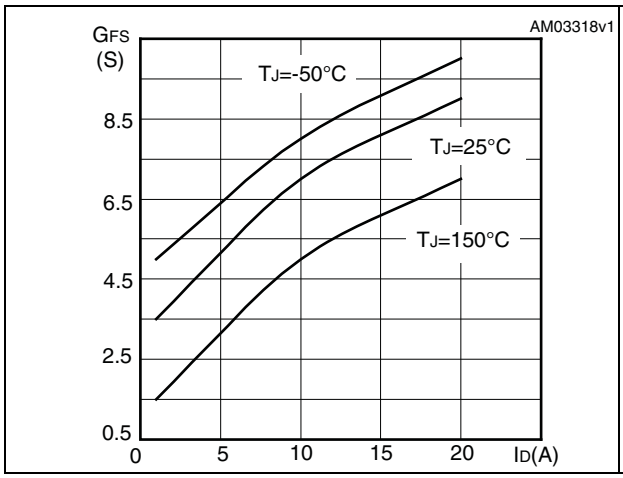

Figure 11. Static drain-source on-resistance

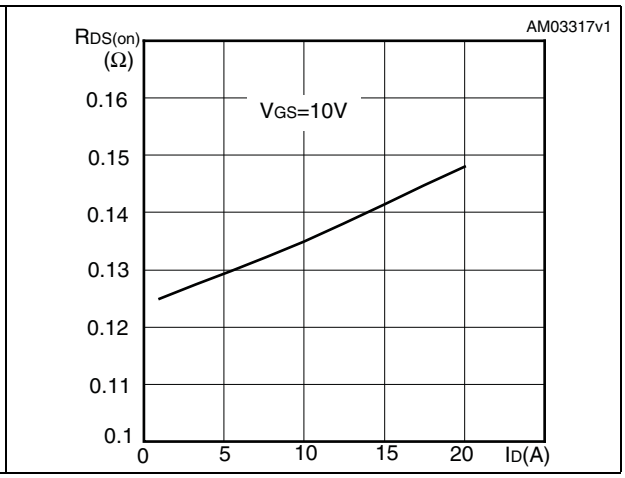

Figure 12. Gate charge vs gate-source voltage

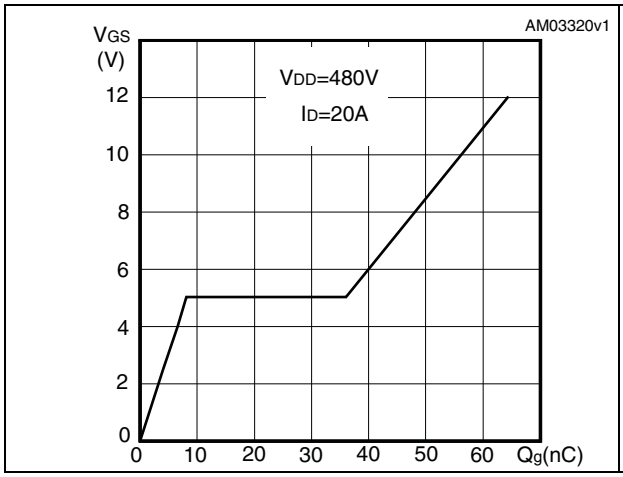

Figure 13. Capacitance variations

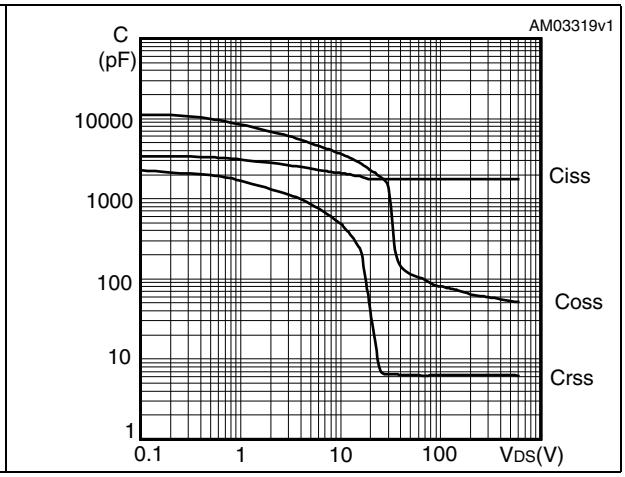

Figure 14. Normalized gate threshold voltage vs temperature

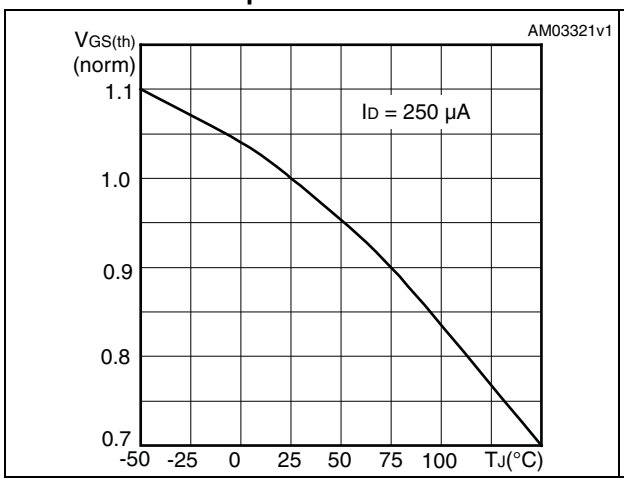

Figure 15. Normalized on resistance vs temperature

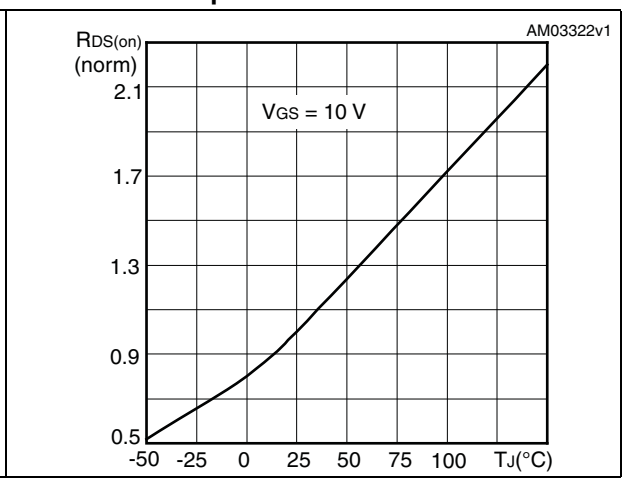

Figure 16. Source-drain diode forward characteristics

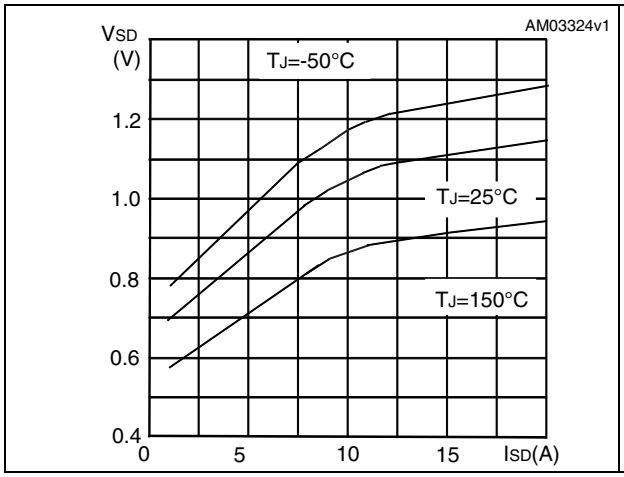

Figure 17. Normalized B_{VDSS} vs temperature

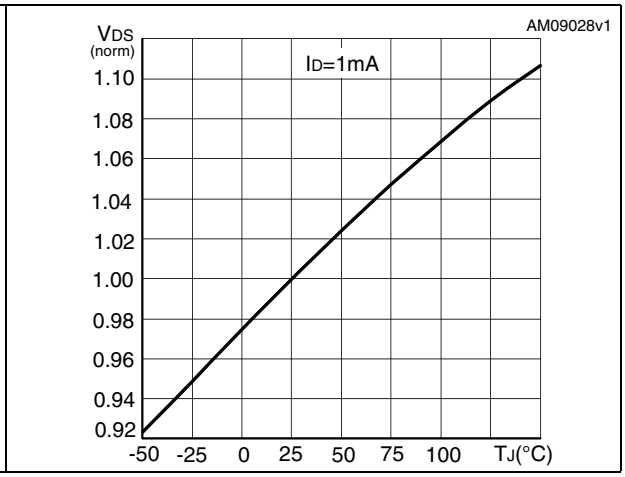

3 Test circuits

Figure 18. Switching times test circuit for resistive load

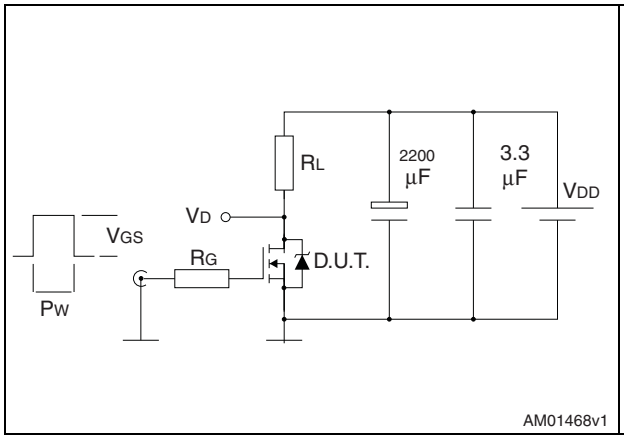

Figure 19. Gate charge test circuit

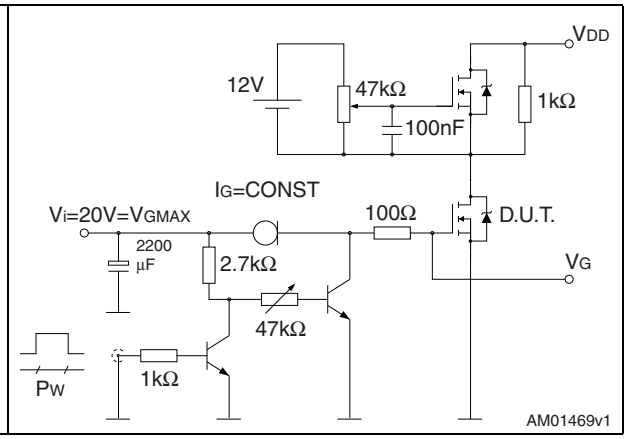

Figure 20. Test circuit for inductive load switching and diode recovery times

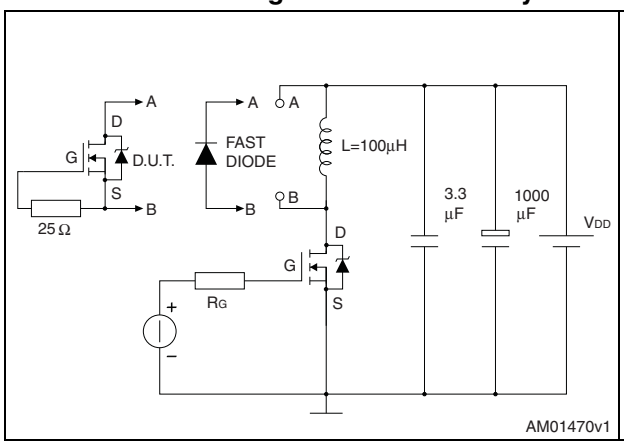

Figure 21. Unclamped inductive load test circuit

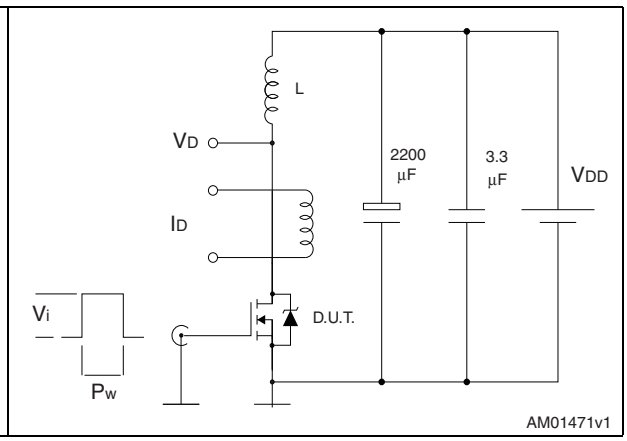

Figure 22. Unclamped inductive waveform

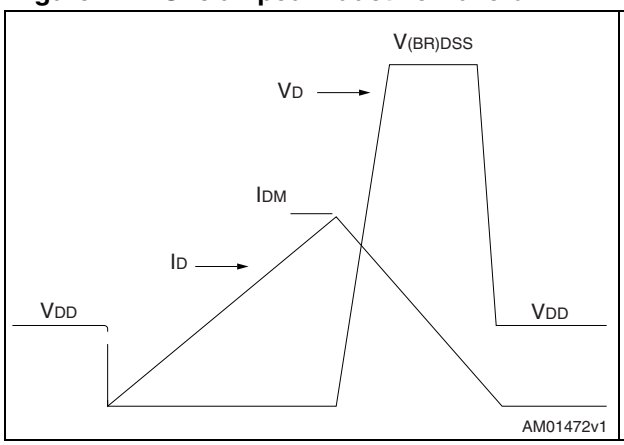

Figure 23. Switching time waveform

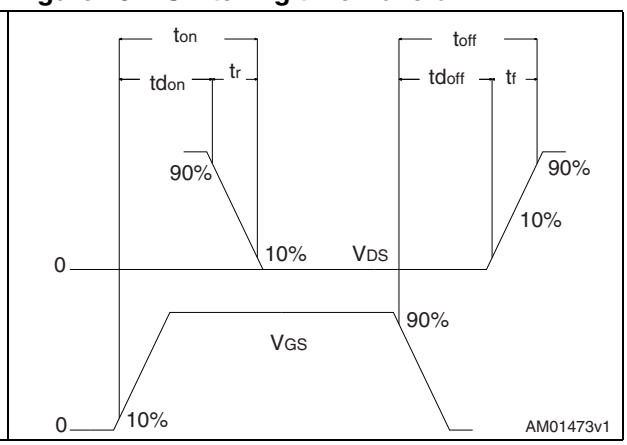

Table 9. D²PAK (TO-263) mechanical data

Dim.	mm		
	Min.	Typ.	Max.
A	4.40		4.60
A1	0.03		0.23
b	0.70		0.93
b2	1.14		1.70
c	0.45		0.60
c2	1.23		1.36
D	8.95		9.35
D1	7.50		
E	10		10.40
E1	8.50		
e		2.54	
e1	4.88		5.28
H	15		15.85
J1	2.49		2.69
L	2.29		2.79
L1	1.27		1.40
L2	1.30		1.75
R		0.4	
V2	0°		8°

Figure 24. D²PAK (TO-263) drawing

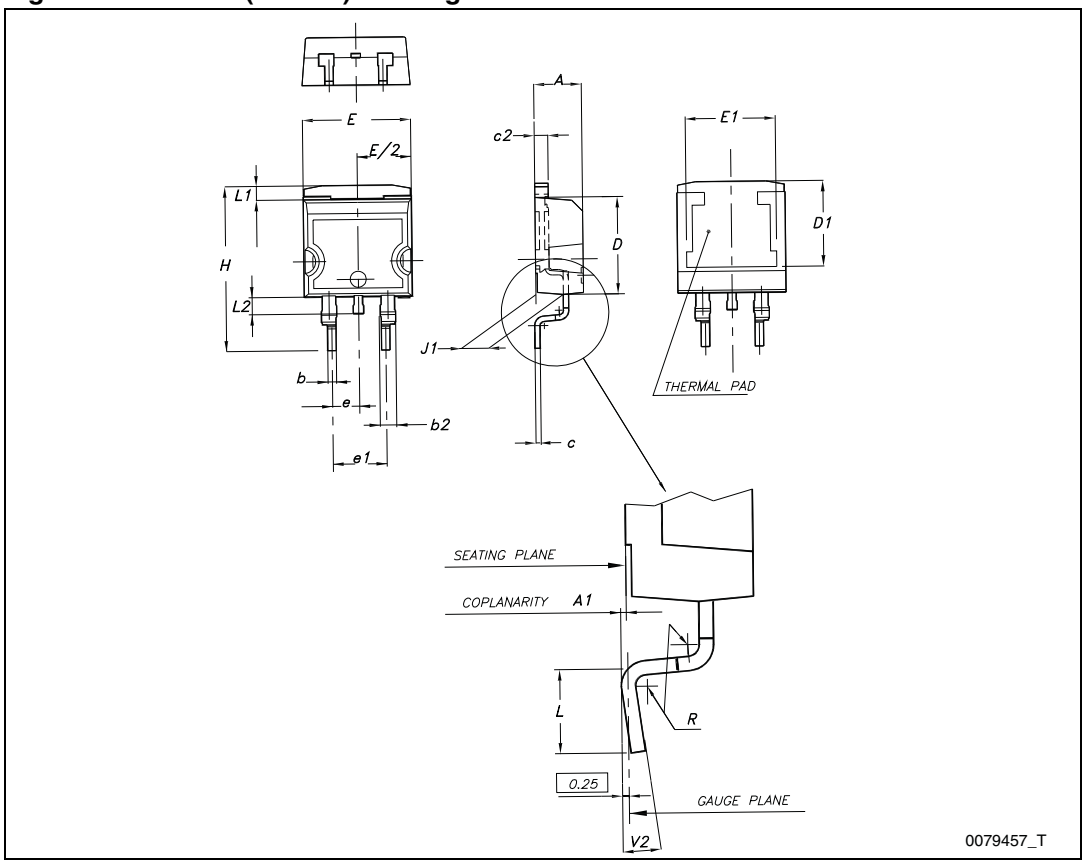

Figure 25. D²PAK footprint[a]

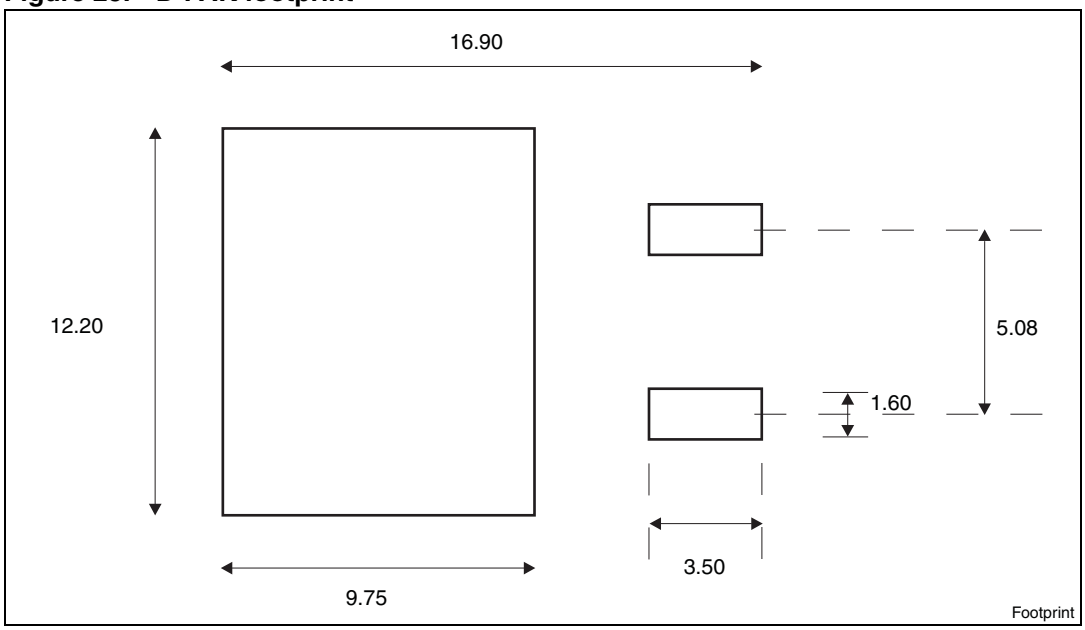

a. All dimension are in millimeters

Table 10. I²PAK (TO-262) mechanical data

DIM.	mm.		
	min.	typ	max.
A	4.40		4.60
A1	2.40		2.72
b	0.61		0.88
b1	1.14		1.70
c	0.49		0.70
c2	1.23		1.32
D	8.95		9.35
e	2.40		2.70
e1	4.95		5.15
E	10		10.40
L	13		14
L1	3.50		3.93
L2	1.27		1.40

Figure 26. I²PAK (TO-262) drawing

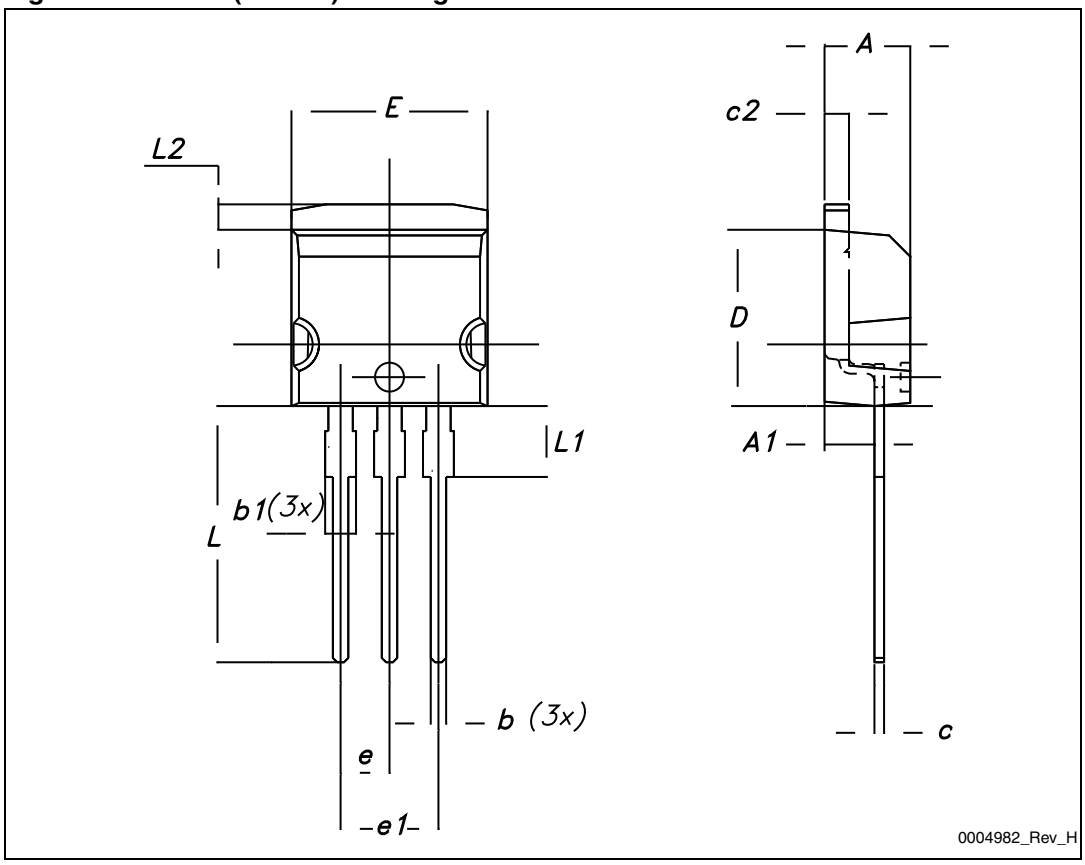

Table 11. TO-220 type A mechanical data

Dim.	mm		
	Min.	Typ.	Max.
A	4.40		4.60
b	0.61		0.88
b1	1.14		1.70
c	0.48		0.70
D	15.25		15.75
D1		1.27	
E	10		10.40
e	2.40		2.70
e1	4.95		5.15
F	1.23		1.32
H1	6.20		6.60
J1	2.40		2.72
L	13		14
L1	3.50		3.93
L20		16.40	
L30		28.90	
∅P	3.75		3.85
Q	2.65		2.95

Figure 27. TO-220 type A drawing

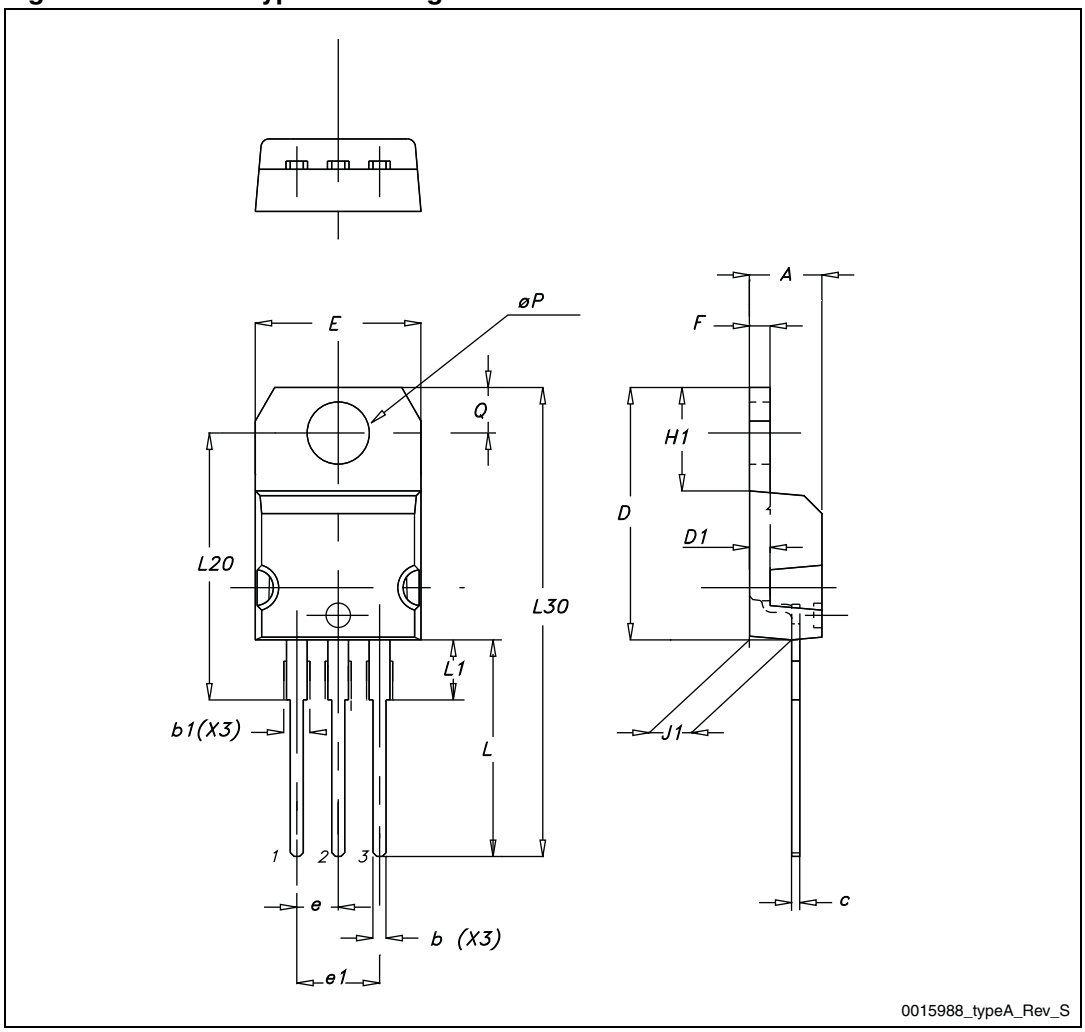

Table 12. TO-220FP mechanical data

Dim.	mm		
	Min.	Typ.	Max.
A	4.4		4.6
B	2.5		2.7
D	2.5		2.75
E	0.45		0.7
F	0.75		1
F1	1.15		1.70
F2	1.15		1.70
G	4.95		5.2
G1	2.4		2.7
H	10		10.4
L2		16	
L3	28.6		30.6
L4	9.8		10.6
L5	2.9		3.6
L6	15.9		16.4
L7	9		9.3
Dia	3		3.2

Figure 28. TO-220FP drawing

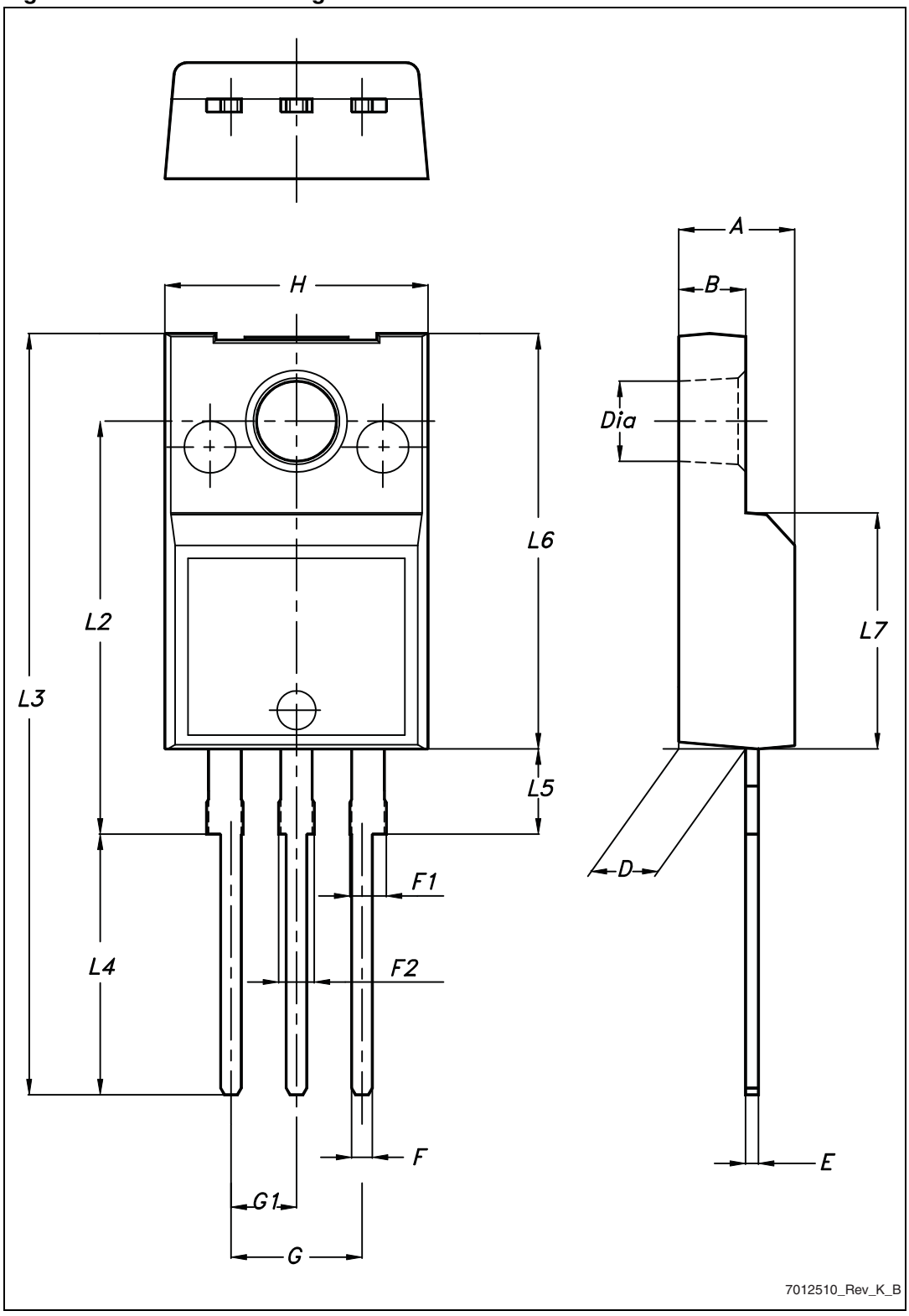

5 Packaging mechanical data

Table 13. D²PAK (TO-263) tape and reel mechanical data

Tape			Reel		
Dim.	mm		Dim.	mm	
	Min.	Max.		Min.	Max.
A0	10.5	10.7	A		330
B0	15.7	15.9	B	1.5	
D	1.5	1.6	C	12.8	13.2
D1	1.59	1.61	D	20.2	
E	1.65	1.85	G	24.4	26.4
F	11.4	11.6	N	100	
K0	4.8	5.0	T		30.4
P0	3.9	4.1			
P1	11.9	12.1	Base qty		1000
P2	1.9	2.1	Bulk qty		1000
R	50				
T	0.25	0.35			
W	23.7	24.3			

Figure 29. Tape

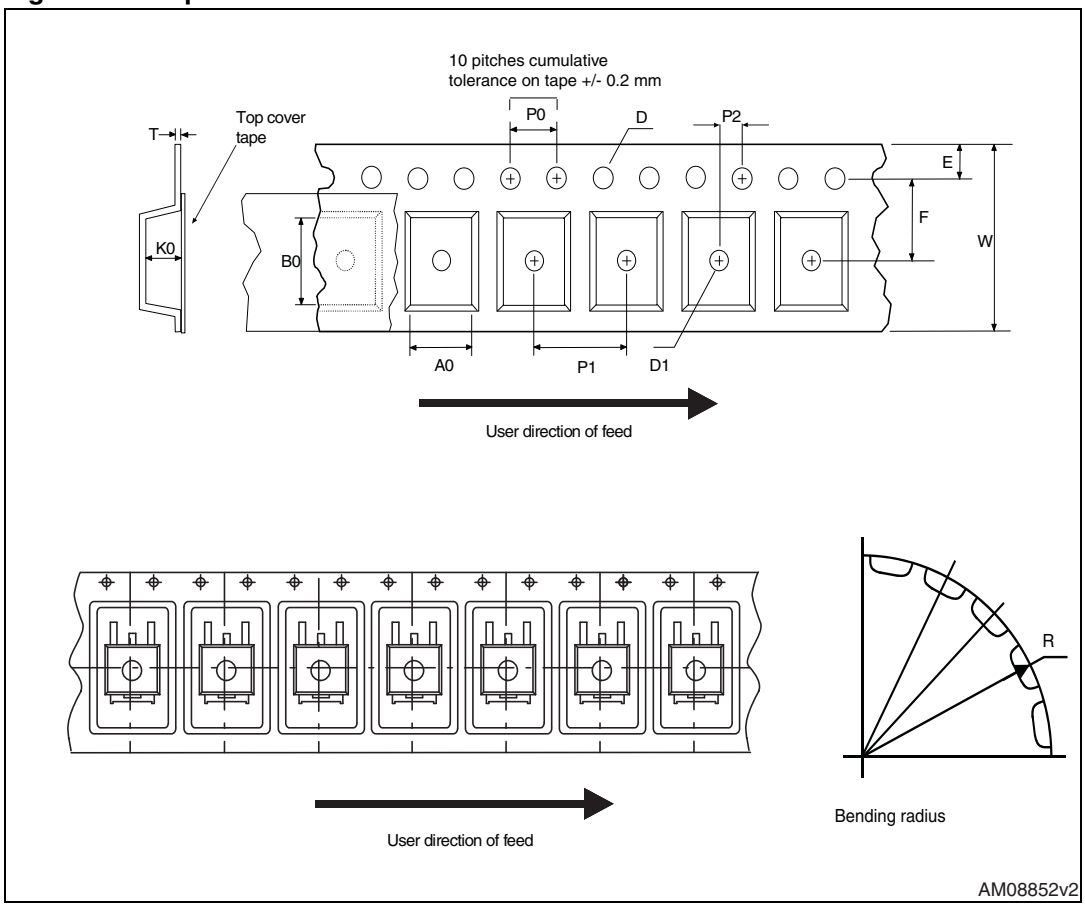

Figure 30. Reel

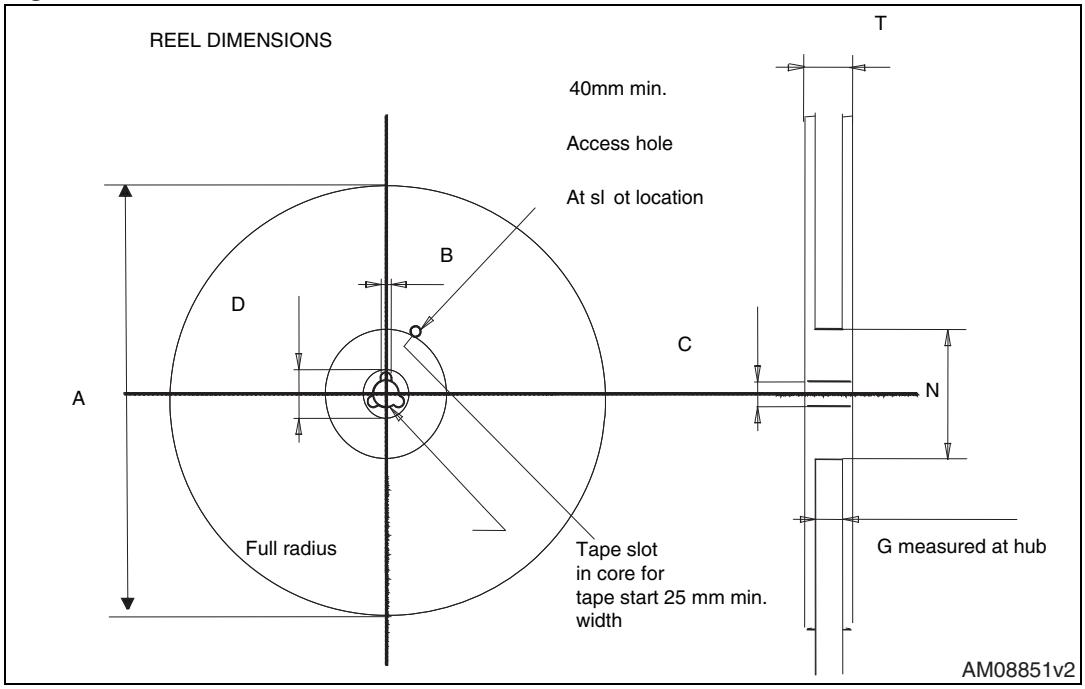

6 Revision history

Table 14. Document revision history

Date	Revision	Changes
29-Apr-2009	1	First release
17-Dec-2009	2	Added new package, mechanical data: D²PAK
20-Jun-2011	3	Inserted device in I^2PAK.
13-Mar-2012	4	Updated P_{TOT} and derating factor in *Table 2*. Update $R_{thj\text{-}case}$ for TO-220FP in *Table 3*. Update *Figure 12* and *Figure 17*. Update *Section 5: Packaging mechanical data*.
20-Jun-2012	5	Updated title on the coverpage. Minor text changes.