N-Channel MOSFET Transistor

FQP2N80C

- **FEATURES**
- Drain Current I_D= 2.4A@ T_C=25℃
- Drain Source Voltage-
  : V_{DSS}= 800V(Min)
- Static Drain-Source On-Resistance
  : $R_{DS(on)}$ = 7.0Ω (Max)
- Fast Switching

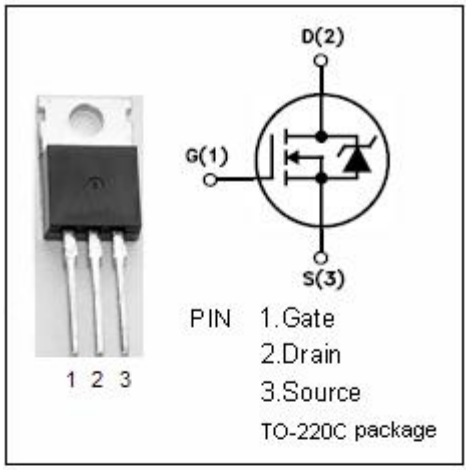

- **APPLICATIONS**
- Switching power supplies,converters,AC and DC motor controls

- **ABSOLUTE MAXIMUM RATINGS(T_a=25℃)**

SYMBOL	PARAMETER	VALUE	UNIT
V_{DSS}	Drain-Source Voltage	800	V
V_{GS}	Gate-Source Voltage-Continuous	±30	V
I_D	Drain Current-Continuous	2.4	A
I_{DM}	Drain Current-Single Plused	9.6	A
P_D	Total Dissipation @T_C=25℃	90	W
T_j	Max. Operating Junction Temperature	150	℃
T_{stg}	Storage Temperature	-55~150	℃

- **THERMAL CHARACTERISTICS**

SYMBOL	PARAMETER	MAX	UNIT
$R_{th\ j\text{-}c}$	Thermal Resistance, Junction to Case	5.2	℃/W
$R_{th\ j\text{-}a}$	Thermal Resistance, Junction to Ambient	62.5	℃/W

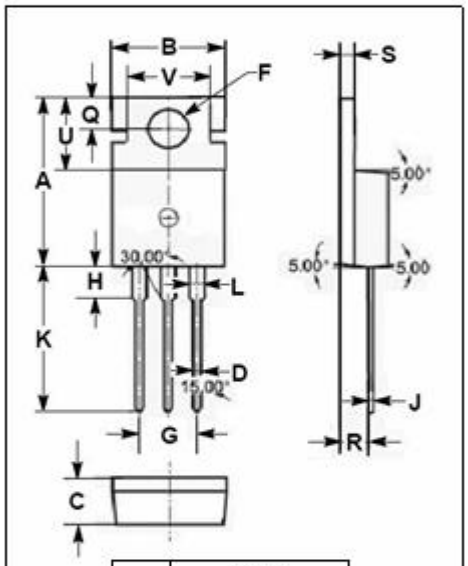

DIM	mm MIN	mm MAX
A	15.70	15.90
B	9.90	10.10
C	4.20	4.40
D	0.70	0.90
F	3.40	3.60
G	4.98	5.18
H	2.70	2.90
J	0.44	0.46
K	13.20	13.40
L	1.10	1.30
Q	2.70	2.90
R	2.50	2.70
S	1.29	1.31
U	6.45	6.65
V	8.66	8.86

N-Channel MOSFET Transistor FQP2N80C

• ELECTRICAL CHARACTERISTICS

T_C=25℃ unless otherwise specified

SYMBOL	PARAMETER	CONDITIONS	MIN	TYPE	MAX	UNIT
$V_{(BR)DSS}$	Drain-Source Breakdown Voltage	V_{GS}= 0; I_D=250μA	800			V
$V_{GS(th)}$	Gate Threshold Voltage	V_{DS}= V_{GS}; I_D=250μA	2.0		4.0	V
V_{SD}	Diode Forward On-voltage	I_S= 2.4A ;V_{GS}= 0			1.4	V
$R_{DS(on)}$	Drain-Source On-Resistance	V_{GS}= 10V; I_D= 1A			7.0	Ω
I_{GSS}	Gate-Body Leakage Current	V_{GS}= ±30V;V_{DS}= 0			±100	nA
I_{DSS}	Zero Gate Voltage Drain Current	V_{DS}=800V; V_{GS}= 0			10	μA
C_{iss}	Input Capacitance	V_{DS}=25V; V_{GS}=0V; f_T=1MHz		425	550	pF
C_{rss}	Reverse Transfer capacitance			5.5	7	
C_{oss}	Output Capacitance			45	60	
t_r	Rise Time	V_{GS}=10V; I_D=2.4A; V_{DD}=400V; R_L=25Ω		30	70	ns
$t_{d(on)}$	Turn-on Delay Time			12	35	
t_f	Fall Time			28	65	
$t_{d(off)}$	Turn-off Delay Time			25	60	